HiKOKI

M 1808DA

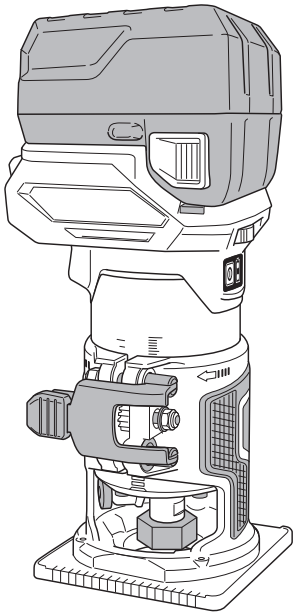

Handling instructions

1

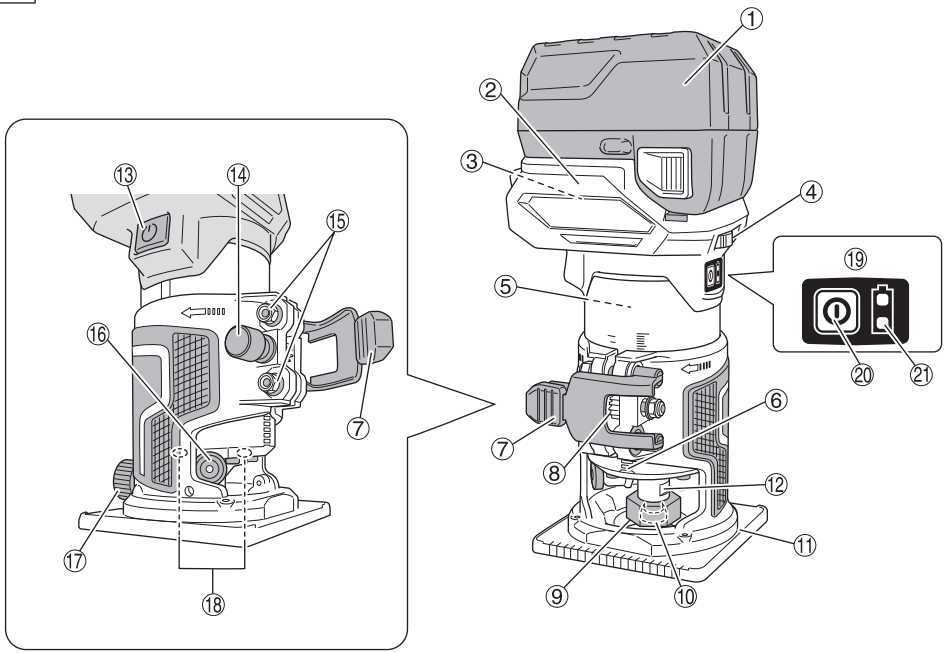

2

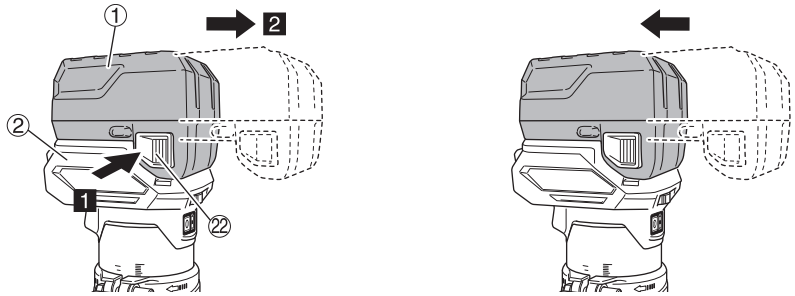

3

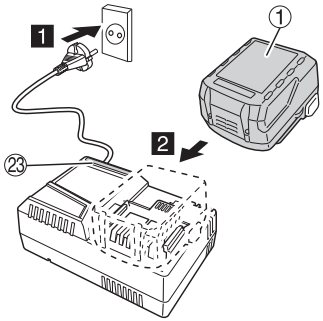

4

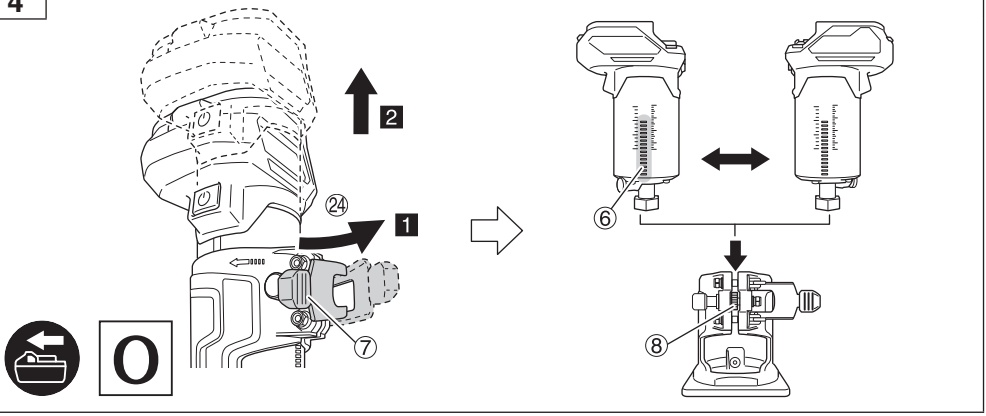
2
24
1
7
6
8

5

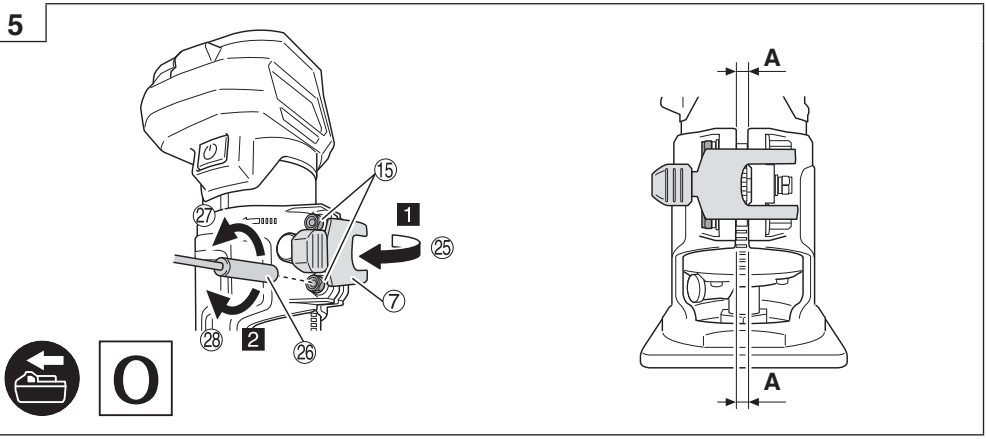
15
27
1
25
7
28
2
26
A
A

6

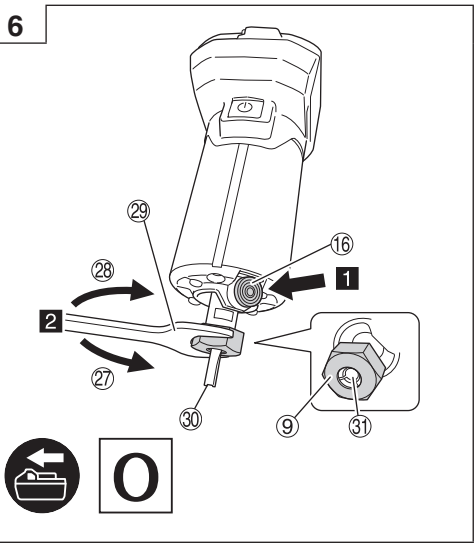
29
16
28
1
2
27
30
9
31

7

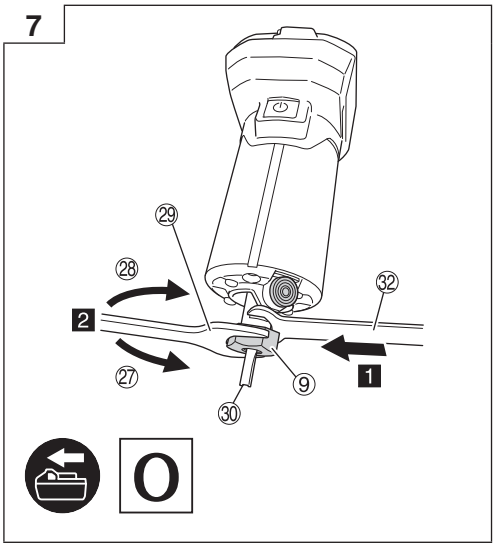
29
28
32
2
27
9
1
30

8

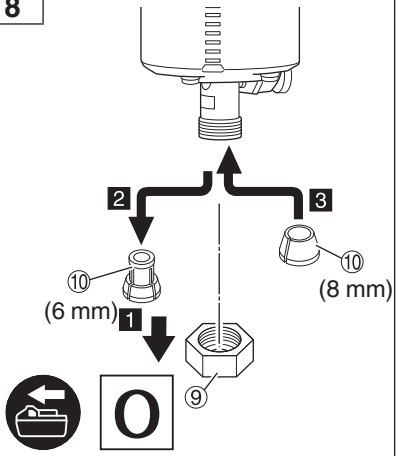
2
3
10
10
(6 mm)
1
(8 mm)
9
O

9

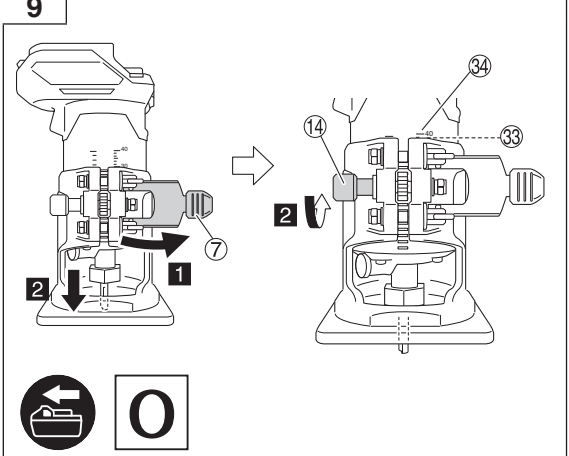
34
14
33
2
7
1
2
O

10

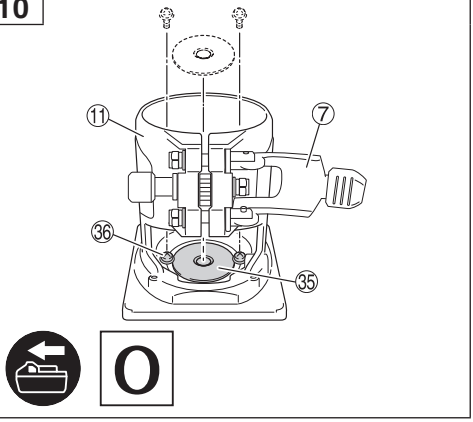
11
7
36
35
O

11

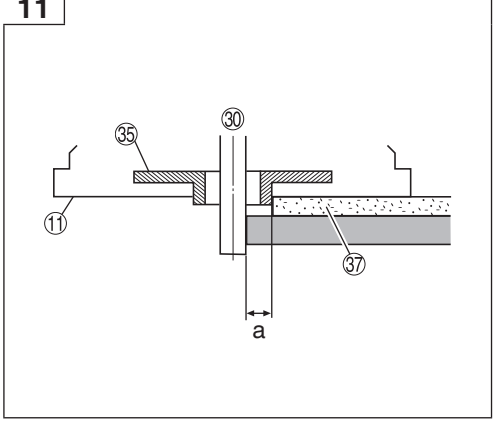
30
35
11
37
a

12

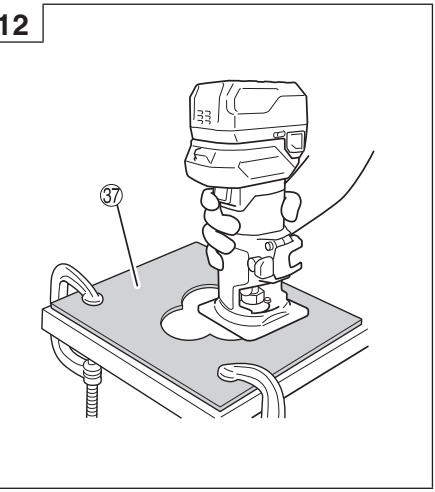
37

13

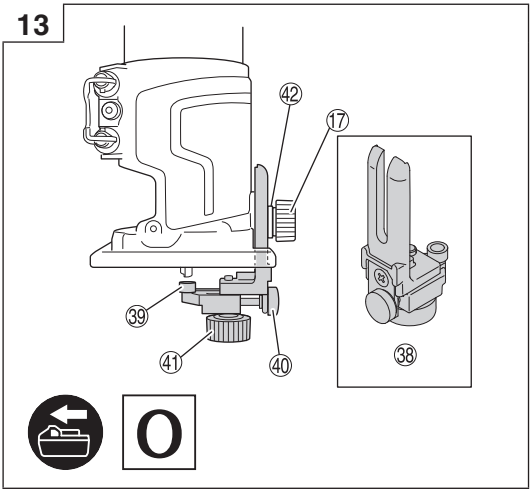
42
17
39
41
40
38
O

14

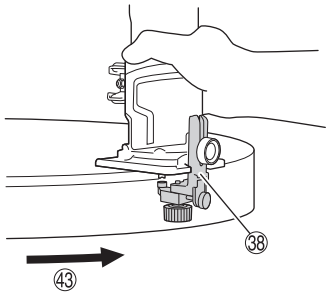

15

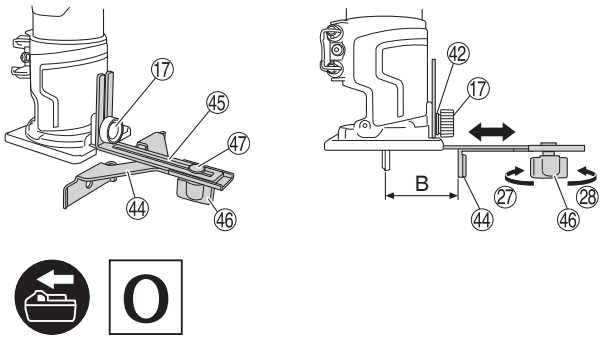

16

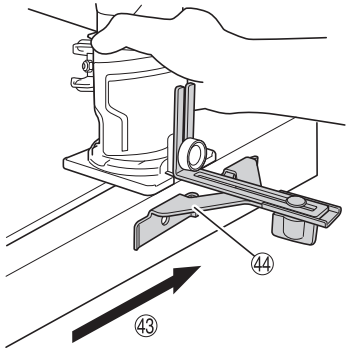

17

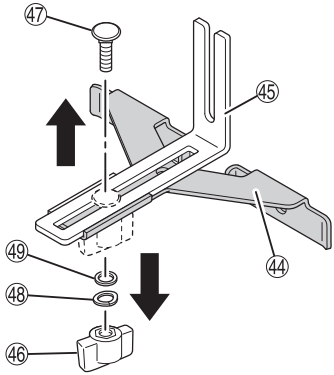

18

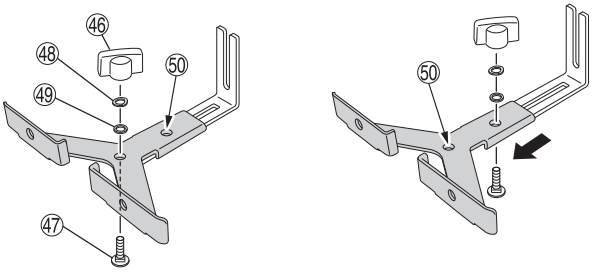

19

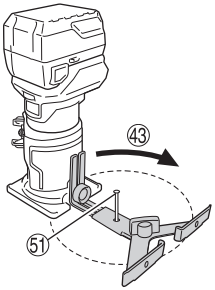

20

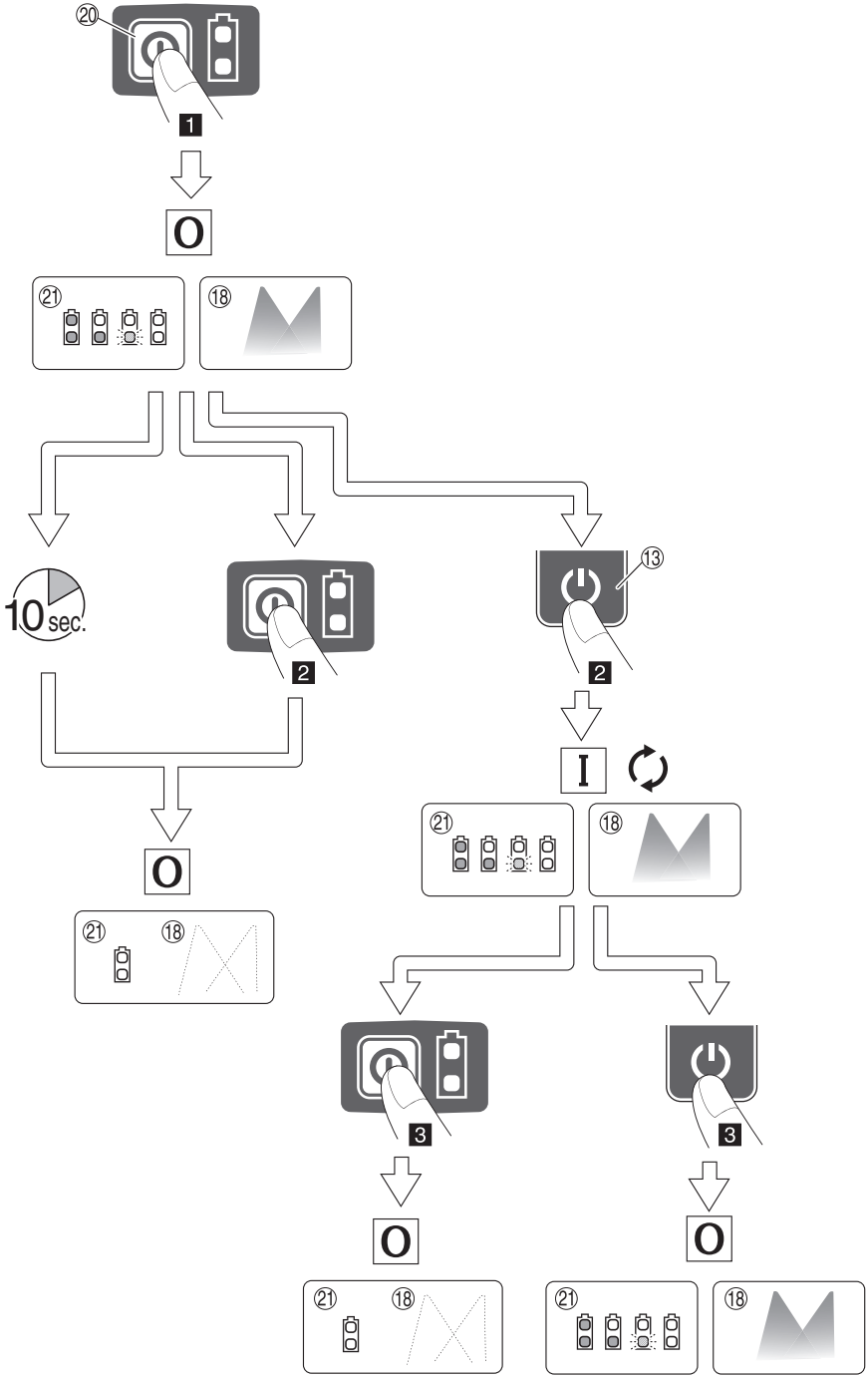

21

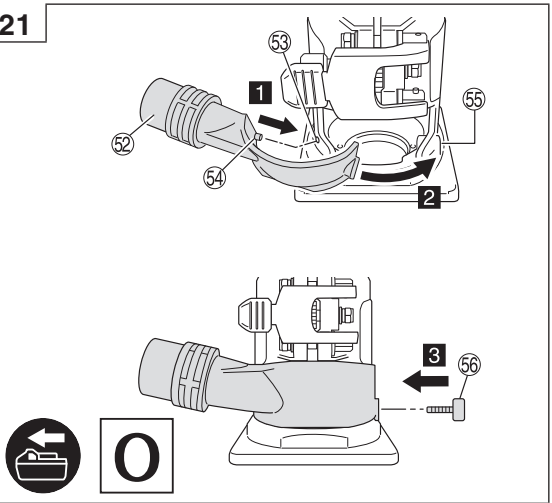

22

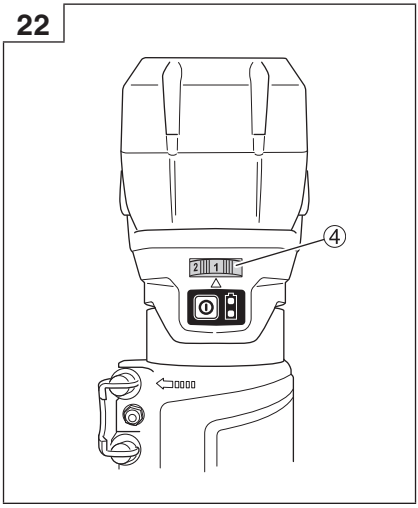

23

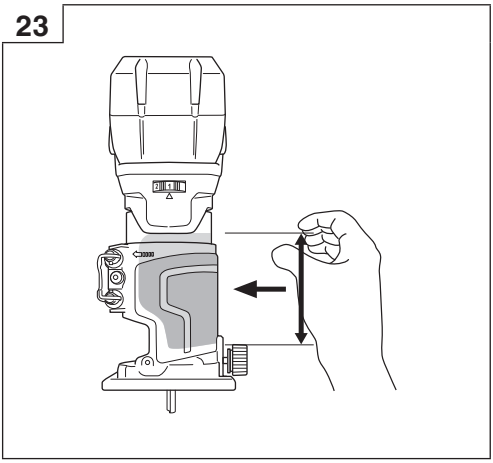

24

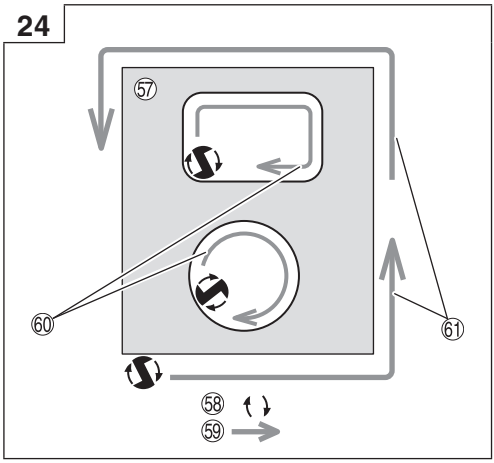

25

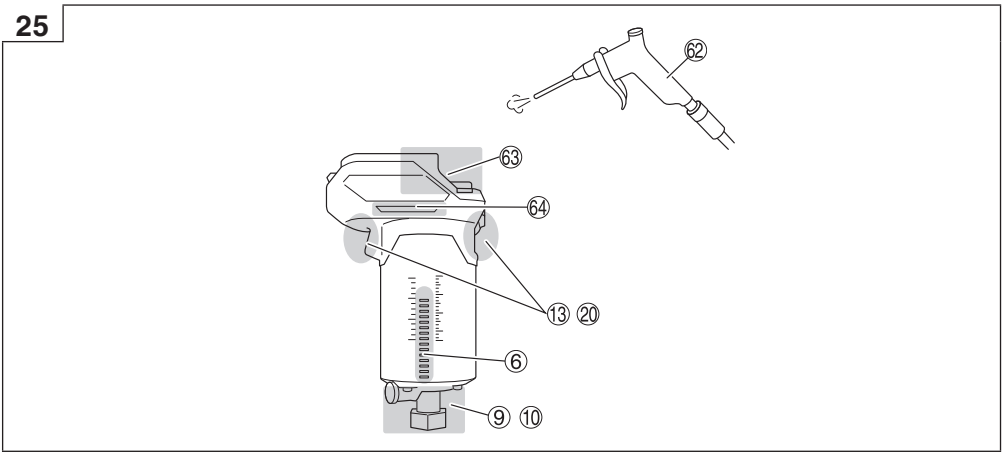

26

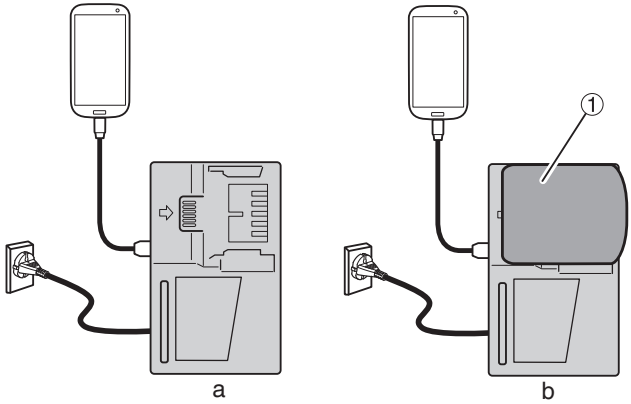

27

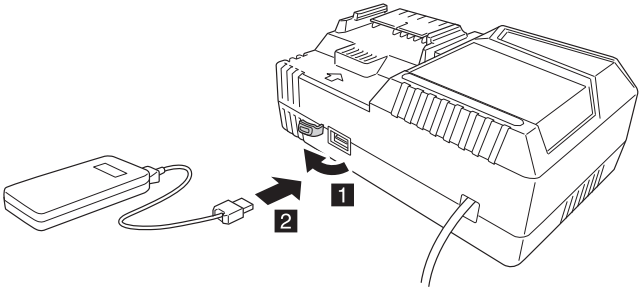

28

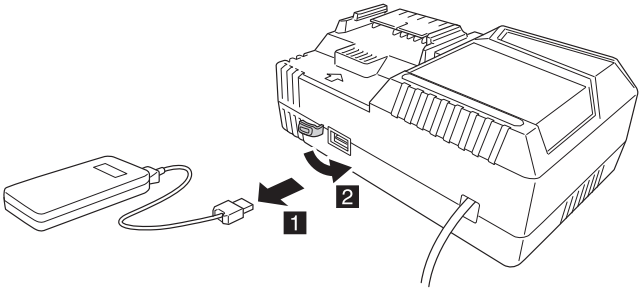

GENERAL POWER TOOL SAFETY WARNINGS

⚠ **WARNING**

Read all safety warnings, instructions, illustrations and specifications provided with this power tool.

Failure to follow all instructions listed below may result in electric shock, fire and/or serious injury.

Save all warnings and instructions for future reference.

The term "power tool" in the warnings refers to your mains-operated (corded) power tool or battery-operated (cordless) power tool.

1) **Work area safety**
   a) **Keep work area clean and well lit.**
   Cluttered or dark areas invite accidents.
   b) **Do not operate power tools in explosive atmospheres, such as in the presence of flammable liquids, gases or dust.**
   Power tools create sparks which may ignite the dust or fumes.
   c) **Keep children and bystanders away while operating a power tool.**
   Distractions can cause you to lose control.

2) **Electrical safety**
   a) **Power tool plugs must match the outlet. Never modify the plug in any way. Do not use any adapter plugs with earthed (grounded) power tools.**
   Unmodified plugs and matching outlets will reduce risk of electric shock.
   b) **Avoid body contact with earthed or grounded surfaces, such as pipes, radiators, ranges and refrigerators.**
   There is an increased risk of electric shock if your body is earthed or grounded.
   c) **Do not expose power tools to rain or wet conditions.**
   Water entering a power tool will increase the risk of electric shock.
   d) **Do not abuse the cord. Never use the cord for carrying, pulling or unplugging the power tool. Keep cord away from heat, oil, sharp edges or moving parts.**
   Damaged or entangled cords increase the risk of electric shock.
   e) **When operating a power tool outdoors, use an extension cord suitable for outdoor use.**
   Use of a cord suitable for outdoor use reduces the risk of electric shock.
   f) **If operating a power tool in a damp location is unavoidable, use a residual current device (RCD) protected supply.**
   Use of an RCD reduces the risk of electric shock.

3) **Personal safety**
   a) **Stay alert, watch what you are doing and use common sense when operating a power tool. Do not use a power tool while you are tired or under the influence of drugs, alcohol or medication.**
   A moment of inattention while operating power tools may result in serious personal injury.
   b) **Use personal protective equipment. Always wear eye protection.**
   Protective equipment such as a dust mask, non-skid safety shoes, hard hat or hearing protection used for appropriate conditions will reduce personal injuries.
   c) **Prevent unintentional starting. Ensure the switch is in the off-position before connecting to power source and/or battery pack, picking up or carrying the tool.**
   Carrying power tools with your finger on the switch or energising power tools that have the switch on invites accidents.
   d) **Remove any adjusting key or wrench before turning the power tool on.**
   A wrench or a key left attached to a rotating part of the power tool may result in personal injury.
   e) **Do not overreach. Keep proper footing and balance at all times.**
   This enables better control of the power tool in unexpected situations.
   f) **Dress properly. Do not wear loose clothing or jewellery. Keep your hair and clothing away from moving parts.**
   Loose clothes, jewellery or long hair can be caught in moving parts.
   g) **If devices are provided for the connection of dust extraction and collection facilities, ensure these are connected and properly used.**
   Use of dust collection can reduce dust-related hazards.
   h) **Do not let familiarity gained from frequent use of tools allow you to become complacent and ignore tool safety principles.**
   A careless action can cause severe injury within a fraction of a second.

4) **Power tool use and care**
   a) **Do not force the power tool. Use the correct power tool for your application.**
   The correct power tool will do the job better and safer at the rate for which it was designed.
   b) **Do not use the power tool if the switch does not turn it on and off.**
   Any power tool that cannot be controlled with the switch is dangerous and must be repaired.
   c) **Disconnect the plug from the power source and/or remove the battery pack, if detachable, from the power tool before making any adjustments, changing accessories, or storing power tools.**
   Such preventive safety measures reduce the risk of starting the power tool accidentally.
   d) **Store idle power tools out of the reach of children and do not allow persons unfamiliar with the power tool or these instructions to operate the power tool.**
   Power tools are dangerous in the hands of untrained users.
   e) **Maintain power tools and accessories. Check for misalignment or binding of moving parts, breakage of parts and any other condition that may affect the power tool's operation. If damaged, have the power tool repaired before use.**
   Many accidents are caused by poorly maintained power tools.
   f) **Keep cutting tools sharp and clean.**
   Properly maintained cutting tools with sharp cutting edges are less likely to bind and are easier to control.
   g) **Use the power tool, accessories and tool bits etc. in accordance with these instructions, taking into account the working conditions and the work to be performed.**
   Use of the power tool for operations different from those intended could result in a hazardous situation.
   h) **Keep handles and grasping surfaces dry, clean and free from oil and grease.**
   Slippery handles and grasping surfaces do not allow for safe handling and control of the tool in unexpected situations.

5) **Battery tool use and care**
   a) **Recharge only with the charger specified by the manufacturer.**
   A charger that is suitable for one type of battery pack may create a risk of fire when used with another battery pack.
   b) **Use power tools only with specifically designated battery packs.**
   Use of any other battery packs may create a risk of injury and fire.
   c) **When battery pack is not in use, keep it away from other metal objects, like paper clips, coins, keys, nails, screws or other small metal objects, that can make a connection from one terminal to another.**
   Shorting the battery terminals together may cause burns or a fire.
   d) **Under abusive conditions, liquid may be ejected from the battery; avoid contact. If contact accidentally occurs, flush with water. If liquid contacts eyes, additionally seek medical help.**
   Liquid ejected from the battery may cause irritation or burns.
   e) **Do not use a battery pack or tool that is damaged or modified.**
   Damaged or modified batteries may exhibit unpredictable behaviour resulting in fire, explosion or risk of injury.
   f) **Do not expose a battery pack or tool to fire or excessive temperature.**
   Exposure to fire or temperature above 130°C may cause explosion.
   g) **Follow all charging instructions and do not charge the battery pack or tool outside the temperature range specified in the instructions.**
   Charging improperly or at temperatures outside the specified range may damage the battery and increase the risk of fire.

6) **Service**
   a) **Have your power tool serviced by a qualified repair person using only identical replacement parts.**
   This will ensure that the safety of the power tool is maintained.
   b) **Never service damaged battery packs.**
   Service of battery packs should only be performed by the manufacturer or authorized service providers.

PRECAUTION
Keep children and infirm persons away.
When not in use, tools should be stored out of reach of children and infirm persons.

CORDLESS TRIMMER SAFETY WARNINGS

1. **Hold the power tool by insulated gripping surfaces, when performing an operation where the cutting accessory may contact hidden wiring.**
   Cutting accessory contacting a "live" wire may make exposed metal parts of the power tool "live" and could give the operator an electric shock.
2. **Use clamps or another practical way to secure and support the workpiece to a stable platform.**
   Holding the work by your hand or against the body leaves it unstable and may lead to loss of control.
3. The bit and shaft, collet nut, collet cone are very hot immediately after operation. Avoid bare hand contact with the bit for any reason.
4. Use bits of the correct shank diameter suitable for the speed of the tool.

ADDITIONAL SAFETY WARNINGS

1. Always charge the battery at a temperature of 0°C–40°C. A temperature of less than 0°C will result in over charging which is dangerous. The battery cannot be charged at a temperature higher than 40°C.
   The most suitable temperature for charging is that of 20°C–25°C.
2. Do not use the charger continuously.
   When one charging is completed, leave the charger for about 15 minutes before the next charging of battery.
3. Do not allow foreign matter to enter the hole for connecting the rechargeable battery.
4. Never disassemble the rechargeable battery and charger.
5. Never short-circuit the rechargeable battery. Shortcircuiting the battery will cause a great electric current and overheat. It results in burn or damage to the battery.
6. Do not dispose of the battery in fire. If the battery is burnt, it may explode.
7. Bring the battery to the shop from which it was purchased as soon as the post-charging battery life becomes too short for practical use. Do not dispose of the exhausted battery.
8. Do not insert object into the air ventilation slots of the charger. Inserting metal objects or inflammables into the charger air ventilation slots will result in electrical shock hazard or damaged charger.
9. When using this unit continuously, the unit may overheat, leading to damage in the motor and switch. Therefore, whenever the housing becomes hot, give the tool a break for a while.
10. If the machine is used continuously at low speed, an extra load is applied to the motor which can result in motor seizure. Always operate the power tool so that the bit is not caught by the material during operation. Always adjust the bit speed to enable smooth cutting.
11. Preparing and checking the work environment. Make sure that the work site meets all the conditions laid forth in the precautions.
12. Make sure that the battery is installed firmly. If it is at all loose it could come off and cause an accident.
13. Dust produced in operation
    The dust produced in normal operation may affect the operator's health. Either of following way is recommended.

    a) **Wear a dust mask**
    b) **Use external dust collection equipment (optional accessories) (Fig. 21)**

    When using the external dust collection equipment, connect the adapter with the hose from external dust collection equipment.
14. Handle the bits very carefully.
15. Check the bit carefully for cracks or damage before operation. Replace cracked or damaged bit immediately.
16. Avoid cutting nails. Inspect for and remove all nails from the workpiece before operation.
17. Make sure to securely hold the tool during operation. Failure to do so can result in accidents or injuries. (**Fig. 23**)
18. Make sure the bit is not contacting the workpiece before the switch is turned on.
19. Before using the tool on an actual workpiece, let it run for a while. Watch for vibration or wobbling that could indicate improperly installed bit.
20. Be careful of the bit rotating direction and the feed direction.

21. Always switch off and wait for the bit to come to a complete stop before removing the tool from workpiece.
22. After changing the bits or making any adjustments, make sure the collet nut and any other adjustment device are securely tightened.
    Loose adjustment device can unexpectedly shift, causing loss of control, loose rotating components will be violently thrown.
23. Do not expose directly your eye to the light by looking into the light.
    If your eye is continuously exposed to the light, your eye will be hurt.
24. Never touch moving parts.
    Never place your hands, fingers or other body parts near the tool's moving parts.
25. NEVER leave tool running unattended. Turn power off.
    Don't leave tool until it comes to a complete stop.
26. The power tool is equipped with a temperature protection circuit to protect the motor. Continuous work may cause the temperature of the unit to rise, activating the temperature protection circuit and automatically stopping operation. If this happens, allow the power tool to cool before resuming use.
27. Do not give a strong shock to the switch panel or break it. It may lead to a trouble.
28. Do not use the product if the tool or the battery terminals (battery mount) are deformed.
    Installing the battery could cause a short circuit that could result in smoke emission or ignition.
29. Keep the tool's terminals (battery mount) free of swarf and dust.
    - Prior to use, make sure that swarf and dust have not collected in the area of the terminals.
    - During use, try to avoid swarf or dust on the tool from falling on the battery.
    - When suspending operation or after use, do not leave the tool in an area where it may be exposed to falling swarf or dust.
      Doing so could cause a short circuit that could result in smoke emission or ignition.
30. Always use the tool and battery at temperatures between -5°C and 40°C.
31. When operating the tool, do not wear work gloves as such cloth wear can get caught in the tool.

CAUTION ON LITHIUM-ION BATTERY

To extend the lifetime, the lithium-ion battery equips with the protection function to stop the output.
In the cases of 1 to 3 described below, when using this product, even if you are pulling the switch, the motor may stop. This is not the trouble but the result of protection function.

1. When the battery power remaining runs out, the motor stops.
   In such a case, charge it up immediately.
2. If the tool is overloaded, the motor may stop. In this case, release the switch of tool and eliminate causes of overloading. After that, you can use it again.
3. If the battery is overheated under overload work, the battery power may stop.
   In this case, stop using the battery and let the battery cool. After that, you can use it again.

Furthermore, please heed the following warning and caution.

WARNING

In order to prevent any battery leakage, heat generation, smoke emission, explosion and ignition beforehand, please be sure to heed the following precautions.

1. Make sure that swarf and dust do not collect on the battery.
   - During work make sure that swarf and dust do not fall on the battery.
   - Make sure that any swarf and dust falling on the power tool during work do not collect on the battery.
   - Do not store an unused battery in a location exposed to swarf and dust.
   - Before storing a battery, remove any swarf and dust that may adhere to it and do not store it together with metal parts (screws, nails, etc.).
2. Do not pierce battery with a sharp object such as a nail, strike with a hammer, step on, throw or subject the battery to severe physical shock.
3. Do not use an apparently damaged or deformed battery.
4. Do not use the battery in reverse polarity.
5. Do not connect directly to an electrical outlets or car cigarette lighter sockets.
6. Do not use the battery for a purpose other than those specified.
7. If the battery charging fails to complete even when a specified recharging time has elapsed, immediately stop further recharging.
8. Do not put or subject the battery to high temperatures or high pressure such as into a microwave oven, dryer, or high pressure container.
9. Keep away from fire immediately when leakage or foul odor are detected.
10. Do not use in a location where strong static electricity generates.
11. If there is battery leakage, foul odor, heat generated, discolored or deformed, or in any way appears abnormal during use, recharging or storage, immediately remove it from the equipment or battery charger, and stop use.
12. Do not immerse the battery or allow any fluids to flow inside. Conductive liquid ingress, such as water, can cause damage resulting in fire or explosion. Store your battery in a cool, dry place, away from combustible and flammable items. Corrosive gas atmospheres must be avoided.

CAUTION

1. If liquid leaking from the battery gets into your eyes, do not rub your eyes and wash them well with fresh clean water such as tap water and contact a doctor immediately.
   If left untreated, the liquid may cause eye-problems.
2. If liquid leaks onto your skin or clothes, wash well with clean water such as tap water immediately.
   There is a possibility that this can cause skin irritation.
3. If you find rust, foul odor, overheating, discolor, deformation, and/or other irregularities when using the battery for the first time, do not use and return it to your supplier or vendor.

WARNING

If a conductive foreign matter enters in the terminal of lithium ion battery, the battery may be shorted, causing fire. When storing the lithium ion battery, obey surely the rules of following contents.

- Do not place conductive debris, nail and wires such as iron wire and copper wire in the storage case.
- To prevent shorting from occurring, load the battery in the tool or insert securely the battery cover for storing until the ventilator is not seen.

REGARDING LITHIUM-ION BATTERY TRANSPORTATION

When transporting a lithium-ion battery, please observe the following precautions.

WARNING

Notify the transporting company that a package contains a lithium-ion battery, inform the company of its power output and follow the instructions of the transportation company when arranging transport.

- Lithium-ion batteries that exceed a power output of 100 Wh are considered to be in the freight classification of Dangerous Goods and will require special application procedures.
- For transportation abroad, you must comply with international law and the rules and regulations of the destination country.
- If the BSL36B18 is installed in the power tool, the power output will exceed 100 Wh and the unit will be classified as Dangerous Goods for freight classification.

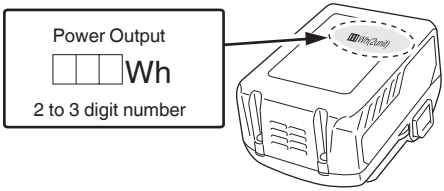

USB DEVICE CONNECTION PRECAUTIONS (UC18YSL3)

When an unexpected problem occurs, the data in a USB device connected to this product may be corrupted or lost. Always make sure to back up any data contained in the USB device prior to use with this product.

Please be aware that our company accepts absolutely no responsibility for any data stored in a USB device that is corrupted or lost, nor for any damage that may occur to a connected device.

WARNING

- Prior to use, check the connecting USB cable for any defect or damage.
  Using a defective or damaged USB cable can cause smoke emission or ignition.
- When the product is not being used, cover the USB port with the rubber cover.
  Buildup of dust etc. in the USB port can cause smoke emission or ignition.

NOTE

- There may be an occasional pause during USB recharging.
- When a USB device is not being charged, remove the USB device from the charger.
  Failure to do so may not only reduce the battery life of a USB device, but may also result in unexpected accidents.
- It may not be possible to charge some USB devices, depending on the type of device.

<USB charging>

- Charging a USB device from an electrical outlet (**Fig. 26-a**)
- Charging a USB device and battery from an electrical outlet (**Fig. 26-b**)
- How to recharge USB device (**Fig. 27**)
- When charging of USB device is completed (**Fig. 28**)

NAMES OF PARTS (Fig. 1–Fig. 28)

①	Battery	㉝	Upper end of base ass'y
②	Head cover	㉞	Scale
③	Name plate	㉟	Template guide
④	Dial	㊱	Screw
⑤	Motor	㊲	Template
⑥	Rack portion	㊳	Trimmer guide
⑦	Lock lever	㊴	Guide pin
⑧	Pinion	㊵	Stop screw
⑨	Collet nut	㊶	Knob bolt (C)
⑩	Collet cone	㊷	Washer (A)
⑪	Base ass'y	㊸	Body feed direction
⑫	Shaft	㊹	Straight guide
⑬	Switch button	㊺	Guide holder
⑭	Knob bolt (A)	㊻	Wing nut
⑮	Fixing nut	㊼	Bolt
⑯	Lock pin	㊽	Wave washer
⑰	Knob bolt (B)	㊾	Washer
⑱	LED light	㊿	Center hole
⑲	Switch Panel	51	Nail (rotation axis)
⑳	Power button	52	Dust collector
㉑	Remaining battery indicator lamp	53	Positioning hole
㉒	Latch	54	Protrusion
㉓	Charge indicator lamp	55	Screw hole
㉔	Removing	56	Knob bolt (D)
㉕	Fixing	57	Work piece
㉖	Socket wrench (8 mm)	58	Rotation of bit
㉗	Loosen	59	Trimmer feed
㉘	Tighten	60	Inner peripheral cutting (Clockwise)
㉙	23 mm Wrench	61	Outer peripheral cutting (Counterclockwise)
㉚	Bit	62	Air gun
㉛	Collet cone hole	63	Battery sliding grooves
㉜	13 mm Wrench	64	Ventilation holes

SYMBOLS

WARNING

The following show symbols used for the machine. Be sure that you understand their meaning before use.

	M1808DA: Cordless Trimmer
	To reduce the risk of injury, user must read instruction manual.
	Always wear eye protection.
	Always wear hearing protection.
⎓	Direct current
V	Rated voltage
n_0	No-load speed
	Disconnect the battery
I	Switching ON
O	Switching OFF
	Warning
	Prohibited action
	The battery remaining power is enough.
	The battery remaining power is a half.
	The battery remaining power is nearly empty. Recharge the battery soonest possible
	No remaining battery charge

STANDARD ACCESSORIES

In addition to the main unit (1 unit), the package contains the accessories listed on page 20.

Standard accessories are subject to change without notice.

APPLICATIONS

- Woodworking jobs centered on grooving and chamfering.

SPECIFICATIONS

Model	M1808DA
Voltage	18 V
No-Load Speed	10000–30000 /min
Collet cone capacity	8 mm, 6 mm or 1/4"
Main Body Stroke	40 mm
Weight	1.7 kg (BSL1850C) 2.2 kg (BSL36B18)

NOTE

Due to HiKOKI's continuing program of research and development, the specifications herein are subject to change without prior notice.

CHARGING

Before using the power tool, charge the battery as follows.

1. **Connect the charger's power cord to the receptacle.**
   When connecting the plug of the charger to a receptacle, the charge indicator lamp will blink in red (At 1- second intervals).
2. **Insert the battery into the charger.**
   Firmly insert the battery into the charger as shown in **Fig. 3** (on page 2).
3. **Charging**
   When inserting a battery in the charger, the charge indicator lamp will blink in blue.
   When the battery becomes fully recharged, the charge indicator lamp will light up in green. (See **Table 1**)

(1) Charge indicator lamp indication
The indications of the charge indicator lamp will be as shown in **Table 1**, according to the condition of the charger or the rechargeable battery.

Table 1

Indications of the charge indicator lamp				
Charge indicator lamp (RED / BLUE / GREEN / PURPLE)	Before charging	Blinks (RED)	Lights for 0.5 seconds. Does not light for 0.5 seconds. (off for 0.5 seconds)	Plugged into power source
	While charging	Blinks (BLUE)	Lights for 0.5 seconds. Does not light for 1 second. (off for 1 second)	Battery capacity at less than 50%
		Blinks (BLUE)	Lights for 1 second. Does not light for 0.5 seconds. (off for 0.5 seconds)	Battery capacity at less than 80%
		Lights (BLUE)	Lights continuously	Battery capacity at more than 80%
	Charging complete	Lights (GREEN)	Lights continuously (Continuous buzzer sound: about 6 seconds)	
	Overheat standby	Blinks (RED)	Lights for 0.3 seconds. Does not light for 0.3 seconds. (off for 0.3 seconds)	Battery overheated. Unable to charge. (Charging will commence when battery cools)
	Charging impossible	Flickers (PURPLE)	Lights for 0.1 seconds. Does not light for 0.1 seconds. (off for 0.1 seconds) (Intermittent buzzer sound: about 2 seconds)	Malfunction in the battery or the charger

(2) Regarding the temperatures and charging time of the rechargeable battery
The temperatures and charging time will become as shown in **Table 2.**

Table 2

Charger			UC18YSL3				
Battery	Type of battery		Li-ion				
	Temperatures at which the battery can be recharged		0°C–50°C				
	Charging voltage	V	14.4		18		
	Charging time, approx. (At 20°C)		BSL14xx series		BSL18xx series		Multi volt series
			(4 cells)	(8 cells)	(5 cells)	(10 cells)	(10 cells)
		min	BSL1415S : 15 BSL1415 : 15 BSL1415X : 15 BSL1420 : 20 BSL1425 : 25 BSL1430C : 30	BSL1430 : 20 BSL1440 : 26 BSL1450 : 32 BSL1460 : 38	BSL1815S : 15 BSL1815 : 15 BSL1815X : 15 BSL1820 : 20 BSL1825 : 25 BSL1830C : 30 BSL1850C : 32	BSL1830 : 20 BSL1840 : 26 BSL1850 : 32 BSL1860 : 38	BSL36A18 : 32 BSL36B18 : 52
USB	Charging voltage	V	5				
	Charging current	A	2				

NOTE
The recharging time may vary according to the ambient temperature and power source voltage.

4. Disconnect the charger's power cord from the receptacle.
5. Hold the charger firmly and pull out the battery.

NOTE
Be sure to pull out the battery from the charger after use, and then keep it.

Regarding electric discharge in case of new batteries, etc.

As the internal chemical substance of new batteries and batteries that have not been used for an extended period is not activated, the electric discharge might be low when using them the first and second time. This is a temporary phenomenon, and normal time required for recharging will be restored by recharging the batteries 2–3 times.

How to make the batteries perform longer.

(1) Recharge the batteries before they become completely exhausted.
When you feel that the power of the tool becomes weaker, stop using the tool and recharge its battery. If you continue to use the tool and exhaust the electric current, the battery may be damaged and its life will become shorter.
(2) Avoid recharging at high temperatures.
A rechargeable battery will be hot immediately after use. If such a battery is recharged immediately after use, its internal chemical substance will deteriorate, and the battery life will be shortened. Leave the battery and recharge it after it has cooled for a while.

CAUTION

○ If the battery is charged while it is heated because it has been left for a long time in a location subject to direct sunlight or because the battery has just been used, the charge indicator lamp of the charger lights for 0.3 seconds, does not light for 0.3 seconds (off for 0.3 seconds). In such a case, first let the battery cool, then start charging.
○ When the charge indicator lamp flickers (at 0.2-second intervals), check for and take out any foreign objects in the charger's battery connector. If there are no foreign objects, it is probable that the battery or charger is malfunctioning. Take it to your authorized Service Center.
○ Since the built-in micro computer takes about 3 seconds to confirm that the battery being charged with UC18YSL3 is taken out, wait for a minimum of 3 seconds before reinserting it to continue charging. If the battery is reinserted within 3 seconds, the battery may not be properly charged.

PRIOR TO OPERATION

WARNING

Pull out battery before carrying out any adjustment, servicing or maintenance.
When finished with a job, pull out the battery.

1. Removing and inserting the battery (Fig. 2)
2. Remaining battery indicator (Fig. 20)
3. Installation direction of base ass'y (Fig. 4)
The switch position can be changed according to preference by reversing the installation direction of the base ass'y.
4. Fix strength adjustment method (Fig. 5)
If there is a decline in the fix strength, adjust as follows.
Tilt the lock lever towards the fixed side, and tighten a fixing nut (two locations) using the socket wrench (8 mm).
Fix it so that upper and lower spaces "A" of the base ass'y are equal.

NOTE

If the operation load of the lock lever is too heavy, there is too much fixed strength.
As this situation may damage parts, each fixing nut (two locations) should be loosened to readjust the fixed strength.

INSTALLING AND REMOVING BITS

WARNING

Be sure to switch power OFF and pull out the battery to avoid serious trouble.

1. Installation using the lock pin (Fig. 6)
(1) Remove the base ass'y from the body.
(2) Deeply insert the bit into collet cone hole. (The distance is 15 mm or more from side of collet nut.
(3) With the bit inserted and pressing the lock pin holding the shaft, use the 23 mm wrench to firmly tighten the collet nut in a clockwise direction (viewed from under the tool). (**Fig. 6**)
(4) Fit the removed base ass'y to the rack provided on the body's outer housing after adjusting the pinion of the base ass'y thereto. Then tilt the lock lever towards the fix side, and fix the base ass'y securely.

When removing the bits, do so by following the steps for installing bits in reverse order.

CAUTION

○ Ensure that the collet nut is firmly tightened after inserting a bit. Failure to do so will result in damage to the collet cone.
○ Ensure that the lock pin is not inserted into the shaft after tightening the collet nut. Failure to do so will result in damage to the collet cone, lock pin and shaft.

2. Install without using the lock pin (Fig. 7)
(1) Remove the base ass'y from the body.
(2) Deeply insert the bit into collet cone hole. (The distance is 15 mm or more from side of collet nut.
(3) Use a 13 mm wrench to secure the shaft, and securely tighten the collet nut with the included wrench.
(4) Fit the removed base ass'y to the rack provided on the body's outer housing after adjusting the pinion of the base ass'y thereto. Then tilt the lock lever towards the fix side, and fix the base ass'y securely.

When removing the bits, do so by following the steps for installing bits in reverse order.

CAUTION

○ Ensure that the collet nut is firmly tightened after inserting a bit. Failure to do so will result in damage to the collet cone.

3. Exchanging the collet cone (Fig. 8)
(1) Securing the shaft, remove the collet nut, and exchange the collet cone.
(2) Attach the nut, insert the bit, and tighten the nut.

NOTE

When tightening the collet nut, make sure that the bit is inserted.
Otherwise, the collet cone may become misshapen.

HOW TO USE THE TRIMMER

1. Adjusting depth of cut (Fig. 9)
(1) Place the tool on a flat wood surface.
(2) Tilt the lock lever towards the remove side, and turn knob bolt (A) to lower the unit until the tip of the bit lightly touches the material. In this position, the scale on the upper end of the base ass'y can be read.
(3) Turn knob bolt (A) upwards to adjust the scale to the desired cutting depth according in accordance with the position read.

2. Guiding the trimmer

WARNING

Be sure to switch power OFF and pull out the battery to avoid serious trouble.

(1) Template Guide (Standard accessory)

It is handy to process with a template a number of materials in one same shape.

(In this case 6 × 6 mm or 1/4" × 1/4" straight bit is usable.)

① Remove the base ass'y from the main unit.

② Install the template guide in the recessed part of the base ass'y and secure it with two screws. (**Fig. 10**)

NOTE

Tighten the two screws moderately. Optimum tightening torque is 10–15 kg-cm.

③ Install the base ass'y in the main unit.

CAUTION

When fit the template guide, the upper part of the template guide must not touch the collet nut.

When using the trimmer along the interior plane of the template, the dimensions of the finished product will be less than the dimensions of the template by a amount equal to dimension “a”, the difference between the radius of the template guide and the radius of the bit. The reverse is true when using the trimmer along the exterior of the template. (**Fig. 11**)

Secure the template to the workpiece. Feed the trimmer in the manner that the template guide moves along the template as shown in **Fig. 12**.

(2) Trimmer guide (Standard accessory)

The guide is handy when used in processing of materials such as trimming and beveling of plywood.

① Fit the trimmer guide on the base ass'y with knob bolt (B).

② Loosen knob bolt (B) to move the trimmer guide up and down.

③ Loosen knob bolt (C) and turn the stop screw to move the guide pin. (**Fig. 13**)

After moving the guide pin, tighten knob bolt (C) to secure it.

④ As shown in **Fig. 14**, securely attach the bottom of the base ass'y to processed surface of the materials. Feed the trimmer with the guide pin alongside the material.

(3) Straight guide (Standard accessory)

Application:

○ It is handy when used for linear processing work such as beveling, grooving and the like.

① Fit the straight guide with knob bolt (B) on the base ass'y and fix it.

② Adjust the length "B" from the bit to the surface of straight guide by loosening the wing nut and moving the straight guide as necessary. (**Fig. 15**)

③ As shown in **Fig. 16**, securely attach the bottom of the base ass'y to processed surface of the materials. Feed the trimmer while keeping the guide plane on the surface of the materials.

○ By exchanging the straight guide with the guide holder, the tool can be used for circle cutting work.

[Processing range (distance from the enter of rotation to the center of the bit)]

Minimum: 84 mm

Maximum: 182 mm

Note that circles measuring 102 to 124 mm and 143 mm to 158 mm cannot be processed.

① Turn wing nut and remove the bolt and washers (2 pieces).

② Reverse the top and bottom of the straight guide and attach it to the guide holder. (**Fig. 17**)

Depending on the radius of the circle to be processed, the holes will vary for the wing nut and bolt.

Processing a circle with a radius of 84 to 102 mm (**Fig. 18-a**)

Processing a circle with a radius of 124 to 182 mm (**Fig. 18-b**)

③ Installation to the tool is the same as that for straight line processing.

④ Align the hole of the straight guide left in the center position of the circle processing, and firmly secure with a nail less than 6 mm in diameter which will act as a rotation axis.

Rotate the body towards the right. (**Fig. 19**)

3. Switch operation (Fig. 20)

The unit will operate when the switch button is pressed after pressing the power button.

See **Fig. 20** for specifications on button controls.

The remaining battery indicator lamp and LED light will always operate together with the power button.

If the power is ON and the tool is not operated for approximately 10 seconds, the power will be automatically switched OFF and the remaining battery indicator lamp and LED light will also be switched off.

4. Dust Collector Set (Standard accessory) (Fig. 21)

Connect the dust collector set cleaner to collect dust.

(1) Slot the protrusion on the inside of the dust collector to the positioning hole at the front lower left of the base ass'y, and attach it to cover the front of the base ass'y.

(2) Using the included knob bolt (D) to secure the dust collector hole to the body's screw hole.

5. Adjusting the rotation speed

The M1808DA has an electronic control system that allows rotation speed changes.

As shown in **Fig. 22**, dial position “1” is for minimum speed, and position “6” for maximum speed.

6. Cutting

CAUTION

○ Wear eye protection when operating this tool.

○ Keep your hands, face and other body parts away from the bits and any other rotating parts, while operating the tool.

NOTE

○ Do not press the lock pin while the motor is rotating. Also, do not switch the tool on while pressing the lock pin.

Doing so may damage the lock pin and/or shaft as well as result in injury.

○ Please limit the cutting depth of a single cut to under 5 mm.

○ When cutting a deep groove, repeat the cut 2 or 3 times. Deep cutting operations can make the tool difficult to control and may overload the motor, resulting in malfunction.

○ Moving the tool forward fast may cause a poor quality of cut, or damage to the bit or motor. Moving the tool forward too slowly may burn and mar the cut.

The proper feed rate will depend on the bit size, the kind of workpiece and depth of cut. Before beginning the cut on the actual workpiece, it is advisable to make a sample cut on a piece of scrap lumber. This will show exactly how the cut will look as well as enable you to check dimensions.

○ Abnormalities and overloads will trigger the overload protector, and stop operation. Remove the load immediately, and turn the power off, then on. The rotation speed should return to normal.

It is recommended that the most appropriate guide be used which is suitable to the type of the work in order to carry out the work exactly without failure.

(Refer to "2. Guiding the trimmer".) The workpieces to be processed should be firmly fixed.

(1) Keep the bit separated from the workpieces and hold the body firmly before switch is turned on. (**Fig. 23**)
(2) The bit rotates clockwise (arrow direction indicated on the base ass'y). To obtain maximum cutting effectiveness, feed the trimmer in conformance with the feed directions shown in **Fig. 24**.

LED LIGHT WARNING SIGNALS (Fig. 29)

This product features functions that are designed to protect the tool itself as well as the battery. When any of the safeguard functions are triggered, any of the LED light will blink as described in **Table 3**.
In this case, follow the instructions described under corrective action.

NOTE

On occasion, about two seconds after stopping operation of the tool, the LED light will shut off and the power will switch OFF.
This means that either the power is near empty or that the battery is overheated.
In such a case, allow the battery to cool and then recharge it for use.

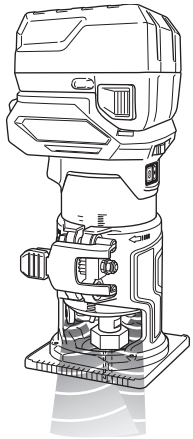

Fig. 29

Table 3

Safeguard Function	LED Light Display	Corrective Action
Overload Protection	On 0.1 second/off 0.1 second	Remove the cause of the overloading.
Temperature Protection	On 0.5 second/off 0.5 second	Allow the tool and battery to thoroughly cool.

MAINTENANCE AND INSPECTION

WARNING

Be sure to turned off the switch and remove the battery before maintenance and inspection.

1. **Inspecting the bit**
   Continued use of a dull or damaged bit will result in reduced cutting efficiency and may cause overloading of the motor. Replace the bit with a new one as soon as excessive abrasion is noted.
2. **Inspecting the mounting screws**
   Regularly inspect all mounting screws and ensure that they are properly tightened. Should any of the screws be loose, retighten them immediately. Failure to do so could result in serious hazard.
3. **Maintenance of the motor**
   The motor unit winding is the very "heart" of the power tool.
   Exercise due care to ensure the winding does not become damaged and/or wet with oil or water.
4. **Inspection of terminals (tool and battery)**
   Check to make sure that swarf and dust have not collected on the terminals.
   On occasion check prior, during and after operation.

CAUTION

Remove any swarf or dust which may have collected on the terminals.
Failure to do so may result in malfunction.

5. **Cleaning on the outside**

WARNING

Wear protective glasses and a dust mask when cleaning the filter with an air gun.
Failure to do so may result in inhalation or exposure of the eyes to debris or dust.

Use an air gun or other similar tool to remove materials, chips, etc. which have adhered to the body (especially where indicated in **Fig. 25**), and wipe with a soft dry cloth or a cloth moistened with soapy water. Do not use chloric solvents, gasoline or paint thinner, for they melt plastics.

6. **Storage**
   Store the power tool and battery in a place in which the temperature is less than 40°C and out of reach of children.

NOTE

Storing lithium-ion batteries.
Make sure the lithium-ion batteries have been fully charged before storing them.
Prolonged storage (3 months or more) of batteries with a low charge may result in performance deterioration, significantly reducing battery usage time or rendering the batteries incapable of holding a charge.
However, significantly reduced battery usage time may be recovered by repeatedly charging and using the batteries two to five times.
If the battery usage time is extremely short despite repeated charging and use, consider the batteries dead and purchase new batteries.

CAUTION

In the operation and maintenance of power tools, the safety regulations and standards prescribed in each country must be observed.

SELECTING ACCESSORIES

The accessories of this machine are listed on page 21.
For details regarding each bit type, please contact the HiKOKI Authorized Service Center.

Important notice on the batteries for the HiKOKI cordless power tools
Please always use one of our designated genuine batteries. We cannot guarantee the safety and performance of our cordless power tool when used with batteries other than these designated by us, or when the battery is disassembled and modified (such as disassembly and replacement of cells or other internal parts).

NOTE
Due to HiKOKI's continuing program of research and development, the specifications herein are subject to change without prior notice.

TROUBLESHOOTING

WARNING
- To avoid injury from an accidental start, turn the switch OFF and remove the plug from the power source or remove the battery from the main body before making any adjustments.
- All electrical or mechanical repairs should be done only by qualified service technicians. Contact HiKOKI Authorized Service Center.

1. Power tool

Problem	Possible Cause	Remedy
Tool doesn't run	No remaining battery power	Charge the battery.
	Battery isn't fully installed.	Push the battery in until you hear a click.
	The power is OFF.	Press the power button to switch the power ON.
Tool suddenly stopped	Tool was overburdened	Get rid of the problem causing the overburden.
		During operation, lighten the applied pressure.
	Battery or tool overheated	Allow the tool and battery to thoroughly cool.
	No remaining battery power	Charge the battery.
Doesn't cut well	The bit is worn or missing teeth.	Replace with a new bit.
	The collet chuck is loose.	Firmly tighten the collet chuck.
Remaining battery indicator lamp is blinking	Indicates that the remaining battery charge is very low.	Recharge as soon as possible.
Remaining battery indicator on the machine doesn't match to Multi volt battery	—	Refer to the indicator lamp on the battery.
Battery cannot be installed	Attempting to install a battery other than that specified for the tool.	Please install batteries that are multi volt or BSL18xx series.

2. Charger

Symptom	Possible cause	Remedy
The charge indicator lamp rapidly flickers purple, and battery charging doesn't begin.	The battery is not inserted all the way.	Insert the battery firmly.
	There is foreign matter in the battery terminal or where the battery is attached.	Remove the foreign matter.
The charge indicator lamp blinks red, and battery charging doesn't begin.	The battery is not inserted all the way.	Insert the battery firmly.
	The battery is overheated.	If left alone, the battery will automatically begin charging if its temperature decreases, but this may reduce battery life. It is recommended that the battery be cooled in a well-ventilated location away from direct sunlight before charging it.
Battery usage time is short even though the battery is fully charged.	The battery's life is depleted.	Replace the battery with a new one.
The battery takes a long time to charge.	The temperature of the battery, the charger, or the surrounding environment is extremely low.	Charge the battery indoors or in another warmer environment.
	The charger's vents are blocked, causing its internal components to overheat.	Avoid blocking the vents.
	The cooling fan is not running.	Contact a HiKOKI Authorized Service Center for repairs.
The USB power lamp has switched off and the USB device has stopped charging.	The battery's capacity has become low.	Replace the battery with one that has capacity remaining.
		Plug the charger's power plug into an electric socket.
USB power lamp does not switch off even though the USB device has finished charging.	The USB power lamp lights up green to indicate that USB charging is possible.	This is not a malfunction.
It is unclear what the charging status of a USB device is, or whether its charging is complete.	The USB power lamp does not switch off even when charging is complete.	Examine the USB device that is charging to confirm its charging status.
Charging of a USB device pauses midway.	The charger was plugged into an electrical socket while the USB device was being charged using the battery as the power source.	This is not a malfunction. The charger pauses USB charging for about 5 seconds when it is differentiating between power sources.
	A battery was inserted into the charger while the USB device was being charged using a power socket as the power source.	
Charging of the USB device pauses midway when the battery and the USB device are being charged at the same time.	The battery has become fully charged.	This is not a malfunction. The charger pauses USB charging for about 5 seconds while it checks whether the battery has successfully completed charging.
Charging of the USB device doesn't start when the battery and the USB device are being charged at the same time.	The remaining battery capacity is extremely low.	This is not a malfunction. When the battery capacity reaches a certain level, USB charging automatically begins.

	M1808DA			
	(2JCP)	(JCP)	(NNP)	(NN)
6 mm 8 mm	1 / — *	—	1 / — *	1
1/4"	1 / — *	1	1 / — *	—
	1	1	1	1
	1	1	1	1
	1	1	1	1
	1	1	1	1
	1	1	1	1
BSL1850C	2	1	—	—
UC18YSL3	1	1	—	—
	2	1	—	—
	1	1	1	—

* The included collet chuck will differ according to region.

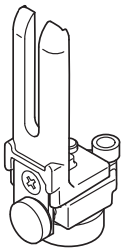

377127

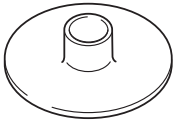

377129

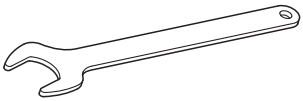

377128

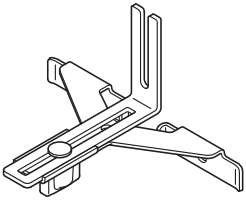

377126

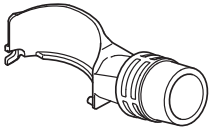

377131

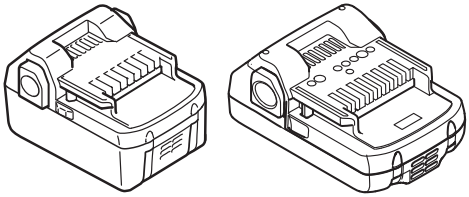

BSL18..

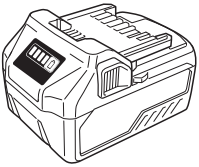

BSL36..18

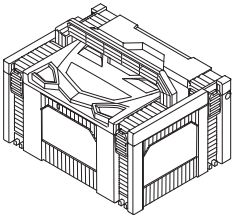

337108

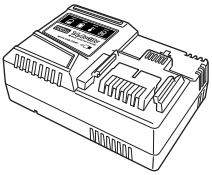

UC18YSL3 (14.4 V–18 V)

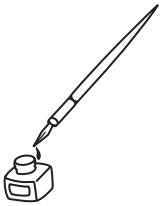

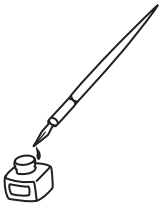

Koki Holdings Co., Ltd.

Shinagawa Intercity Tower A, 15-1, Konan 2-chome,
Minato-ku, Tokyo, Japan

012
Code No. C99740511 F
Printed in China