HiKOKI

# DS 18DBSL・DV 18DBSL

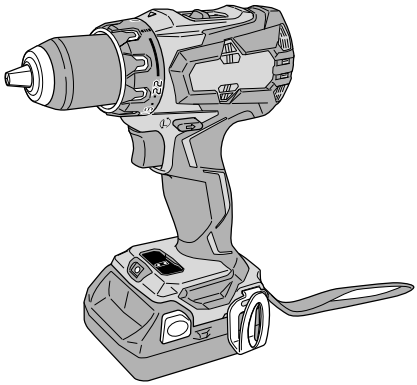

DS18DBSL

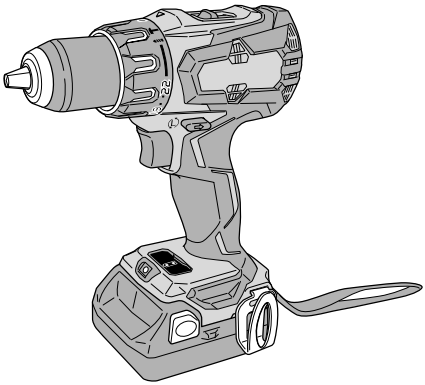

DV18DBSL

Handling instructions

## GENERAL POWER TOOL SAFETY WARNINGS

⚠ **WARNING**

**Read all safety warnings and all instructions.**
*Failure to follow the warnings and instructions may result in electric shock, fire and/or serious injury.*

**Save all warnings and instructions for future reference.**

*The term "power tool" in the warnings refers to your mains-operated (corded) power tool or battery-operated (cordless) power tool.*

1) **Work area safety**
   a) **Keep work area clean and well lit.**
   *Cluttered or dark areas invite accidents.*
   b) **Do not operate power tools in explosive atmospheres, such as in the presence of flammable liquids, gases or dust.**
   *Power tools create sparks which may ignite the dust or fumes.*
   c) **Keep children and bystanders away while operating a power tool.**
   *Distractions can cause you to lose control.*

2) **Electrical safety**
   a) **Power tool plugs must match the outlet. Never modify the plug in any way. Do not use any adapter plugs with earthed (grounded) power tools.**
   *Unmodified plugs and matching outlets will reduce risk of electric shock.*
   b) **Avoid body contact with earthed or grounded surfaces, such as pipes, radiators, ranges and refrigerators.**
   *There is an increased risk of electric shock if your body is earthed or grounded.*
   c) **Do not expose power tools to rain or wet conditions.**
   *Water entering a power tool will increase the risk of electric shock.*
   d) **Do not abuse the cord. Never use the cord for carrying, pulling or unplugging the power tool. Keep cord away from heat, oil, sharp edges or moving parts.**
   *Damaged or entangled cords increase the risk of electric shock.*
   e) **When operating a power tool outdoors, use an extension cord suitable for outdoor use.**
   *Use of a cord suitable for outdoor use reduces the risk of electric shock.*
   f) **If operating a power tool in a damp location is unavoidable, use a residual current device (RCD) protected supply.**
   *Use of an RCD reduces the risk of electric shock.*

3) **Personal safety**
   a) **Stay alert, watch what you are doing and use common sense when operating a power tool. Do not use a power tool while you are tired or under the influence of drugs, alcohol or medication.**
   *A moment of inattention while operating power tools may result in serious personal injury.*
   b) **Use personal protective equipment. Always wear eye protection.**
   *Protective equipment such as dust mask, non-skid safety shoes, hard hat, or hearing protection used for appropriate conditions will reduce personal injuries.*
   c) **Prevent unintentional starting. Ensure the switch is in the off position before connecting to power source and/or battery pack, picking up or carrying the tool.**
   *Carrying power tools with your finger on the switch or energising power tools that have the switch on invites accidents.*
   d) **Remove any adjusting key or wrench before turning the power tool on.**
   *A wrench or a key left attached to a rotating part of the power tool may result in personal injury.*
   e) **Do not overreach. Keep proper footing and balance at all times.**
   *This enables better control of the power tool in unexpected situations.*
   f) **Dress properly. Do not wear loose clothing or jewellery. Keep your hair, clothing and gloves away from moving parts.**
   *Loose clothes, jewellery or long hair can be caught in moving parts.*
   g) **If devices are provided for the connection of dust extraction and collection facilities, ensure these are connected and properly used.**
   *Use of dust collection can reduce dust-related hazards.*

4) **Power tool use and care**
   a) **Do not force the power tool. Use the correct power tool for your application.**
   *The correct power tool will do the job better and safer at the rate for which it was designed.*
   b) **Do not use the power tool if the switch does not turn it on and off.**
   *Any power tool that cannot be controlled with the switch is dangerous and must be repaired.*
   c) **Disconnect the plug from the power source and/or the battery pack from the power tool before making any adjustments, changing accessories, or storing power tools.**
   *Such preventive safety measures reduce the risk of starting the power tool accidentally.*
   d) **Store idle power tools out of the reach of children and do not allow persons unfamiliar with the power tool or these instructions to operate the power tool.**
   *Power tools are dangerous in the hands of untrained users.*
   e) **Maintain power tools. Check for misalignment or binding of moving parts, breakage of parts and any other condition that may affect the power tool's operation. If damaged, have the power tool repaired before use.**
   *Many accidents are caused by poorly maintained power tools.*
   f) **Keep cutting tools sharp and clean.**
   *Properly maintained cutting tools with sharp cutting edges are less likely to bind and are easier to control.*
   g) **Use the power tool, accessories and tool bits etc. in accordance with these instructions, taking into account the working conditions and the work to be performed.**
   *Use of the power tool for operations different from those intended could result in a hazardous situation.*

5) **Battery tool use and care**
   a) **Recharge only with the charger specified by the manufacturer.**
   *A charger that is suitable for one type of battery pack may create a risk of fire when used with another battery pack.*
   b) **Use power tools only with specifically designated battery packs.**
   *Use of any other battery packs may create a risk of injury and fire.*

c) **When battery pack is not in use, keep it away from other metal objects, like paper clips, coins, keys, nails, screws or other small metal objects, that can make a connection from one terminal to another.**
*Shorting the battery terminals together may cause burns or a fire.*

d) **Under abusive conditions, liquid may be ejected from the battery; avoid contact. If contact accidentally occurs, flush with water. If liquid contacts eyes, additionally seek medical help.**
*Liquid ejected from the battery may cause irritation or burns.*

6) **Service**

a) **Have your power tool serviced by a qualified repair person using only identical replacement parts.**
*This will ensure that the safety of the power tool is maintained.*

**PRECAUTION**
**Keep children and infirm persons away.**
**When not in use, tools should be stored out of reach of children and infirm persons.**

## CORDLESS DRIVER DRILL / IMPACT DRIVER DRILL SAFETY WARNINGS

**<DV18DBSL>**

1. **Wear ear protectors when impact drilling.**
Exposure to noise can cause hearing loss.

**<DS18DBSL / DV18DBSL>**

1. **Use auxiliary handle(s), if supplied with the tool.**
Loss of control can cause personal injury.
2. **Hold power tool by insulated gripping surfaces, when performing an operation where the cutting accessory or fastener may contact hidden wiring.**
Cutting accessory and fasteners contacting a "live" wire may make exposed metal parts of the power tool "live" and could give the operator an electric shock.

## ADDITIONAL SAFETY WARNINGS

1. Make sure that the area to be drilled is absolutely free of any hidden obstructions including electrical wiring, water, or gas pipes. Drilling into the aforementioned may result in electric shock or short circuit, gas leak or other hazards that can cause serious accidents or injuries.
2. Make sure to securely hold the tool during operation. Failure to do so can result in accidents or injuries.
3. Secure the workpiece. A workpiece clamped with clamping devices or in a vice is held more secure than by hand.
4. Setting up and checking the work environment. Check if the work environment is suitable by following the precaution.
5. Do not allow foreign matter to enter the hole for connecting the rechargeable battery.
6. Never disassemble the rechargeable battery and charger.
7. Never short-circuit the rechargeable battery. Shortcircuiting the battery will cause a great electric current and overheat. It results in burn or damage to the battery.
8. Do not dispose of the battery in fire. If the battery is burnt, it may explode.
9. Bring the battery to the shop from which it was purchased as soon as the post-charging battery life becomes too short for practical use. Do not dispose of the exhausted battery.
10. Do not insert object into the air ventilation slots of the charger. Inserting metal objects or inflammables into the charger air ventilation slots will result in electrical shock hazard or damaged charger.
11. When mounting a bit into the keyless chuck, tighten the sleeve adequately. If the sleeve is not tight, the bit may slip or fall out, causing injury.
12. When changing the rotational speed with the shift knob, confirm that the switch is off. Changing the speed while the motor is rotating will damage the gears.
13. The clutch dial cannot be set between the numerals "1, 4, 7 … 22" or the dots, and do not use with the clutch dial numeral between "22" and the line at the middle of the drill mark. Doing so may cause damage.
14. Always use this unit with clockwise rotation, when using it as impact drill.
15. Resting the unit after continuous work.
16. The power tool is equipped with a temperature protection circuit to protect the motor. Continuous work may cause the temperature of the unit to rise, activating the temperature protection circuit and automatically stopping operation. If this happens, allow the power tool to cool before resuming use.
17. The motor may stop in the event the tool is overloaded. In this should occur, release the tool's switch and eliminate the cause of the overload.
18. The motor rotation may be locked to cease while the unit is used as drill. While operating the driver drill, take care not to lock the motor.
19. The use of the battery in a cold condition (below 0 degree Centigrade) can sometimes result in the weakened tightening torque and reduced amount of work. This, however, is a temporary phenomenon, and returns to normal when the battery warms up.
20. Install securely the hook. Unless the hook is securely installed, it may cause an injury while using.
21. Do not look directly into the light. Such actions could result in eye injury.
Wipe off any dirt or grime attached to the lens of the LED light with a soft cloth, being careful not to scratch the lens.
Scratches on the lens of the LED light can result in decreased brightness.
22. This product contains a strong permanent magnet in the motor.
Observe the following adhering of chips to the tool and the effect of the permanent magnet on electronic devices.

- Do not place the tool on a workbench or work area where metal chips are present.
The chips may adhere to the tool, resulting in injury or malfunction.
- If chips have adhered to the tool, do not touch it.
Remove the chips with a brush.
Failure to do so may result in injury.
- Do not use the tool in the vicinity of precision devices such as cell phones, magnetic cards or electronic memory media.
Doing so may lead to misoperation, malfunction or loss of data.

## CAUTION ON LITHIUM-ION BATTERY

To extend the lifetime, the lithium-ion battery equips with the protection function to stop the output.
In the cases of 1 to 3 described below, when using this product, even if you are pulling the switch, the motor may stop. This is not the trouble but the result of protection function.

1. When the battery power remaining runs out, the motor stops.
In such a case, charge it up immediately.

2. If the tool is overloaded, the motor may stop. In this case, release the switch of tool and eliminate causes of overloading. After that, you can use it again.
3. If the battery is overheated under overload work, the battery power may stop.
   In this case, stop using the battery and let the battery cool. After that, you can use it again.

Furthermore, please heed the following warning and caution.

**WARNING**

In order to prevent any battery leakage, heat generation, smoke emission, explosion and ignition beforehand, please be sure to heed the following precautions.

1. Make sure that swarf and dust do not collect on the battery.
   - During work make sure that swarf and dust do not fall on the battery.
   - Make sure that any swarf and dust falling on the power tool during work do not collect on the battery.
   - Do not store an unused battery in a location exposed to swarf and dust.
   - Before storing a battery, remove any swarf and dust that may adhere to it and do not store it together with metal parts (screws, nails, etc.).
2. Do not pierce battery with a sharp object such as a nail, strike with a hammer, step on, throw or subject the battery to severe physical shock.
3. Do not use an apparently damaged or deformed battery.
4. Do not use the battery in reverse polarity.
5. Do not connect directly to an electrical outlets or car cigarette lighter sockets.
6. Do not use the battery for a purpose other than those specified.
7. If the battery charging fails to complete even when a specified recharging time has elapsed, immediately stop further recharging.
8. Do not put or subject the battery to high temperatures or high pressure such as into a microwave oven, dryer, or high pressure container.
9. Keep away from fire immediately when leakage or foul odor are detected.
10. Do not use in a location where strong static electricity generates.
11. If there is battery leakage, foul odor, heat generated, discolored or deformed, or in any way appears abnormal during use, recharging or storage, immediately remove it from the equipment or battery charger, and stop use.
12. Do not immerse the battery or allow any fluids to flow inside. Conductive liquid ingress, such as water, can cause damage resulting in fire or explosion. Store your battery in a cool, dry place, away from combustible and flammable items. Corrosive gas atmospheres must be avoided.

**CAUTION**

1. If liquid leaking from the battery gets into your eyes, do not rub your eyes and wash them well with fresh clean water such as tap water and contact a doctor immediately.
   If left untreated, the liquid may cause eye-problems.
2. If liquid leaks onto your skin or clothes, wash well with clean water such as tap water immediately.
   There is a possibility that this can cause skin irritation.
3. If you find rust, foul odor, overheating, discolor, deformation, and/or other irregularities when using the battery for the first time, do not use and return it to your supplier or vendor.

**WARNING**

If a conductive foreign matter enters in the terminal of lithium ion battery, the battery may be shorted, causing fire. When storing the lithium ion battery, obey surely the rules of following contents.

- Do not place conductive debris, nail and wires such as iron wire and copper wire in the storage case.
- To prevent shorting from occurring, load the battery in the tool or insert securely the battery cover for storing until the ventilator is not seen.

## REGARDING LITHIUM-ION BATTERY TRANSPORTATION

When transporting a lithium-ion battery, please observe the following precautions.

**WARNING**

Notify the transporting company that a package contains a lithium-ion battery, inform the company of its power output and follow the instructions of the transportation company when arranging transport.

- Lithium-ion batteries that exceed a power output of 100Wh are considered to be in the freight classification of Dangerous Goods and will require special application procedures.
- For transportation abroad, you must comply with international law and the rules and regulations of the destination country.

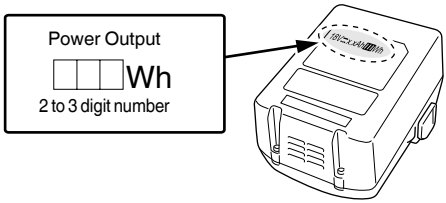


## USB DEVICE CONNECTION PRECAUTIONS (UC18YSL3)

When an unexpected problem occurs, the data in a USB device connected to this product may be corrupted or lost. Always make sure to back up any data contained in the USB device prior to use with this product.

Please be aware that our company accepts absolutely no responsibility for any data stored in a USB device that is corrupted or lost, nor for any damage that may occur to a connected device.

**WARNING**

- Prior to use, check the connecting USB cable for any defect or damage.
  Using a defective or damaged USB cable can cause smoke emission or ignition.
- When the product is not being used, cover the USB port with the rubber cover.
  Buildup of dust etc. in the USB port can cause smoke emission or ignition.

**NOTE**

- There may be an occasional pause during USB recharging.
- When a USB device is not being charged, remove the USB device from the charger.
  Failure to do so may not only reduce the battery life of a USB device, but may also result in unexpected accidents.
- It may not be possible to charge some USB devices, depending on the type of device.

## NAMES OF PARTS (Fig. 1 – Fig. 16)

| | | | |
|---|---|---|---|
| ① | Rechargeable battery | ⑫ | Groove |
| ② | Latch | ⑬ | Trigger switch |
| ③ | Handle | ⑭ | Remaining battery indicator lamp |
| ④ | Pilot lamp | ⑮ | Display panel |
| ⑤ | Drill mark | ⑯ | Remaining battery indicator switch |
| ⑥ | Clutch dial | ⑰ | Sleeve |
| ⑦ | Triangle mark | ⑱ | Push button |
| ⑧ | Hammer mark | ⑲ | Rubber cover |
| ⑨ | Shift knob | ⑳ | USB port |
| ⑩ | Screw | ㉑ | USB cable |
| ⑪ | Hook | | |

## SYMBOLS

**WARNING**

**The following show symbols used for the machine. Be sure that you understand their meaning before use.**

| | |
|---|---|
| | DS18DBSL: Cordless Driver Drill<br>DV18DBSL: Cordless Impact Driver Drill |
| | To reduce the risk of injury, user must read instruction manual. |
| ⎓ | Direct current |
| V | Rated voltage |
| $n_0$ | No-load speed |
| /min | Oscillation per minute |
| Bpm | Impact rate |
| Ls | Low speed |
| Hs | High speed |
| | Brick |
| | Wood |
| | Metal |
| | Machine screw |
| | Wood screw |
| | Drill chuck capacity |
| kg | Weight |
| | Drilling |
| | Impact drilling |
| I | Switching ON |
| O | Switching OFF |
| | Disconnect the battery |
| H | Change rotation speed - High speed |
| L | Change rotation speed - Low speed |
| R | Clockwise rotation |
| L | Counterclockwise rotation |
| | The battery remaining power is nearly empty. Recharge the battery soonest possible |
| | The battery remaining power is a half. |
| | The battery remaining power is enough. |
| | Lights ;<br>The battery remaining power is over 75% |
| | Lights ;<br>The battery remaining power is 50% – 75%. |
| | Lights ;<br>The battery remaining power is 25% – 50%. |
| | Lights ;<br>The battery remaining power is less than 25% |
| | Blinks ;<br>The battery remaining power is nearly empty. Recharge the battery soonest possible. |
| | Blinks ;<br>Output suspended due to high temperature. Remove the battery from the tool and allow it to fully cool down. |
| | Blinks ;<br>Output suspended due to failure or malfunction. The problem may be the battery so please contact your dealer. |
| ⚠ | Warning |

## STANDARD ACCESSORIES

In addition to the main unit (1 unit), the package contains the accessories listed on page 11.
Standard accessories are subject to change without notice.

## APPLICATIONS

<DS18DBSL>
- Driving and removing of machine screws, wood screws, tapping screws, etc.
- Drilling of various metals
- Drilling of various woods

<DV18DBSL>
- Drilling of brick and concrete block, etc.
- Driving and removing of machine screws, wood screws, tapping screws, etc.
- Drilling of various metals
- Drilling of various woods

## SPECIFICATIONS

The specifications of this machine are listed in the Table on page 11.

**NOTE**

Due to HiKOKI's continuing program of research and development, the specifications herein are subject to change without prior notice.

## CHARGING

Before using the power tool, charge the battery as follows.

1. **Connect the charger's power cord to the receptacle.**
   When connecting the plug of the charger to a receptacle, the pilot lamp will blink in red (At 1- second intervals).
   **CAUTION**
   Do not use the electrical cord if damaged. Have it repaired immediately.
2. **Insert the battery into the charger.**
   Firmly insert the battery into the charger as shown in **Fig. 2**.

<UC18YSL3>

3. **Charging**
   When inserting a battery in the charger, the charge indicator lamp will blink in blue.
   When the battery becomes fully recharged, the charge indicator lamp will light up in green. (See **Table 1**)

(1) Charge indicator lamp indication
The indications of the charge indicator lamp will be as shown in **Table 1**, according to the condition of the charger or the rechargeable battery.

**Table 1**

| Indications of the charge indicator lamp | | | | |
|---|---|---|---|---|
| Charge indicator lamp (RED / BLUE / GREEN / PURPLE) | Before charging | Blinks (RED) | Lights for 0.5 seconds. Does not light for 0.5 seconds. (off for 0.5 seconds) | Plugged into power source |
| | While charging | Blinks (BLUE) | Lights for 0.5 seconds. Does not light for 1 second. (off for 1 second) | Battery capacity at less than 50% |
| | | Blinks (BLUE) | Lights for 1 second. Does not light for 0.5 seconds. (off for 0.5 seconds) | Battery capacity at less than 80% |
| | | Lights (BLUE) | Lights continuously | Battery capacity at more than 80% |
| | Charging complete | Lights (GREEN) | Lights continuously (Continuous buzzer sound: about 6 seconds) | |
| | Overheat standby | Blinks (RED) | Lights for 0.3 seconds. Does not light for 0.3 seconds. (off for 0.3 seconds) | Battery overheated. Unable to charge. (Charging will commence when battery cools) |
| | Charging impossible | Flickers (PURPLE) | Lights for 0.1 seconds. Does not light for 0.1 seconds. (off for 0.1 seconds) (Intermittent buzzer sound: about 2 seconds) | Malfunction in the battery or the charger |

(2) Regarding the temperatures and charging time of the rechargeable battery
The temperatures and charging time will become as shown in **Table 2**.

**Table 2**

| Charger | | | UC18YSL3 | | | | |
|---|---|---|---|---|---|---|---|
| Battery | Type of battery | | Li-ion | | | | |
| | Temperatures at which the battery can be recharged | | -10°C – 50°C | | | | |
| | Charging voltage | V | 14.4 | | 18 | | |
| | Charging time, approx. (At 20°C) | | BSL14xx series | | BSL18xx series | | Multi volt series |
| | | | (4 cells) | (8 cells) | (5 cells) | (10 cells) | (10 cells) |
| | | min. | BSL1415S : 15<br>BSL1415 : 15<br>BSL1415X : 15<br>BSL1420 : 20<br>BSL1425 : 25<br>BSL1430C : 30 | BSL1430 : 20<br>BSL1440 : 26<br>BSL1450 : 32<br>BSL1460 : 38 | BSL1815S : 15<br>BSL1815 : 15<br>BSL1815X : 15<br>BSL1820 : 20<br>BSL1825 : 25<br>BSL1830C : 30 | BSL1830 : 20<br>BSL1840 : 26<br>BSL1850 : 32<br>BSL1860 : 38 | BSL36A18 : 32 |
| USB | Charging voltage | V | 5 | | | | |
| | Charging current | A | 2 | | | | |

**NOTE**
The recharging time may vary according to the ambient temperature and power source voltage.

4. **Disconnect the charger's power cord from the receptacle.**
5. **Hold the charger firmly and pull out the battery.**

**NOTE**

Be sure to pull out the battery from the charger after use, and then keep it.

**Regarding electric discharge in case of new batteries, etc.**

As the internal chemical substance of new batteries and batteries that have not been used for an extended period is not activated, the electric discharge might be low when using them the first and second time. This is a temporary phenomenon, and normal time required for recharging will be restored by recharging the batteries 2 – 3 times.

**How to make the batteries perform longer.**

(1) Recharge the batteries before they become completely exhausted.
When you feel that the power of the tool becomes weaker, stop using the tool and recharge its battery. If you continue to use the tool and exhaust the electric current, the battery may be damaged and its life will become shorter.

(2) Avoid recharging at high temperatures.
A rechargeable battery will be hot immediately after use. If such a battery is recharged immediately after use, its internal chemical substance will deteriorate, and the battery life will be shortened. Leave the battery and recharge it after it has cooled for a while.

**CAUTION**

○ If the battery is charged while it is heated because it has been left for a long time in a location subject to direct sunlight or because the battery has just been used, the charge indicator lamp of the charger lights for 0.3 seconds, does not light for 0.3 seconds (off for 0.3 seconds). In such a case, first let the battery cool, then start charging.

○ When the charge indicator lamp flickers (at 0.2-second intervals), check for and take out any foreign objects in the charger's battery connector. If there are no foreign objects, it is probable that the battery or charger is malfunctioning. Take it to your authorized Service Center.

○ Since the built-in micro computer takes about 3 seconds to confirm that the battery being charged with UC18YSL3 is taken out, wait for a minimum of 3 seconds before reinserting it to continue charging. If the battery is reinserted within 3 seconds, the battery may not be properly charged.

<UC18YFSL>

6. **Charging**
When inserting a battery in the charger, charging will commence and the pilot lamp will light continuously in red.
When the battery becomes fully recharged, the pilot lamp will blink in red. (At 1-second intervals) (See **Table 3**)

● Pilot lamp indication
The indications of the pilot lamp will be as shown in **Table 3**, according to the condition of the charger or the rechargeable battery.

**Table 3**

| Indications of the pilot lamp | | | | |
|---|---|---|---|---|
| Pilot lamp (red) | Before charging | Blinks | Lights for 0.5 seconds. Does not light for 0.5 seconds. (off for 0.5 seconds) | |
| | While charging | Lights | Lights continuously | |
| | Charging complete | Blinks | Lights for 0.5 seconds. Does not light for 0.5 seconds. (off for 0.5 seconds) | |
| | Overheat standby | Blinks | Lights for 1 second. Does not light for 0.5 seconds. (off for 0.5 seconds) | Battery overheated. Unable to charge. (Charging will commence when battery cools) |
| | Charging impossible | Flickers | Lights for 0.1 seconds. Does not light for 0.1 seconds. (off for 0.1 seconds) | Malfunction in the battery or the charger |

● Regarding the temperatures and charging time of the battery.
The temperatures and charging time will become as shown in **Table 4**

**Table 4**

| Charger | | | UC18YFSL | | | | |
|---|---|---|---|---|---|---|---|
| Battery | Type of battery | | Li-ion | | | | |
| | Temperatures at which the battery can be recharged | | 0°C – 50°C | | | | |
| | Charging voltage | V | 14.4 | | 18 | | |
| | Charging time, approx. (At 20°C) | | BSL14xx series | | BSL18xx series | | Multi volt series |
| | | | (4 cells) | (8 cells) | (5 cells) | (10 cells) | (10 cells) |
| | | min. | BSL1415S : 20<br>BSL1415 : 22<br>BSL1415X : 22<br>BSL1420 : 30<br>BSL1425 : 35<br>BSL1430C : 45 | BSL1430 : 45<br>BSL1440 : 60<br>BSL1450 : 75<br>BSL1460 : 90 | BSL1815S : 20<br>BSL1815 : 22<br>BSL1815X : 22<br>BSL1820 : 30<br>BSL1825 : 35<br>BSL1830C : 45 | BSL1830 : 45<br>BSL1840 : 60<br>BSL1850 : 75<br>BSL1860 : 90 | BSL36A18 : 75 |

**NOTE**
The recharging time may vary according to the ambient temperature and power source voltage.

**CAUTION**
When the battery charger has been continuously used, the battery charger will be heated, thus constituting the cause of the failures. Once the charging has been completed, give 15 minutes rest until the next charging.

7. **Disconnect the charger's power cord from the receptacle.**
8. **Hold the charger firmly and pull out the battery.**

**NOTE**
Be sure to pull out the battery from the charger after use, and then keep it.

**CAUTION**
- ○ If the battery is charged while it is heated because it has been left for a long time in a location subject to direct sunlight or because the battery has just been used, the pilot lamp of the charger lights for 1 second, does not light for 0.5 seconds (off for 0.5 seconds). In such a case, first let the battery cool, then start charging.
- ○ When the pilot lamp flickers (at 0.2-second intervals), check for and take out any foreign objects in the charger's battery connector. If there are no foreign objects, it is probable that the battery or charger is malfunctioning. Take it to your authorized Service Center.
- ○ Since the built-in micro computer takes about 3 seconds to confirm that the battery being charged with charger is taken out, wait for a minimum of 3 seconds before reinserting it to continue charging. If the battery is reinserted within 3 seconds, the battery may not be properly charged.

## MOUNTING AND OPERATION


| Action | Figure | Page |
|---|---|---|
| Removing and inserting the battery | 1 | 12 |
| Charging | 2 | 12 |
| Tightening torque adjustment | 3 | 12 |
| Selecting the drill position | 4 | 12 |
| Selecting the impact position | 5 | 12 |
| Change rotation speed | 6 | 12 |
| Removing and mounting the hook | 7 | 13 |
| Remaining battery indicator (Main body) | 8 | 13 |
| Remaining battery indicator (Battery: BSL36A18) | 9 | 13 |
| How to use the LED light | 10 | 13 |
| Mounting the bit | 11 | 14 |
| Reversing the rotational direction | 12 | 14 |
| Switch operation | 13 | 14 |
| Charging a USB device from a electrical outlet (UC18YSL3 only) | 14-a | 14 |
| Charging a USB device and battery from a electrical outlet (UC18YSL3 only) | 14-b | 14 |
| How to recharge USB device (UC18YSL3 only) | 15 | 15 |
| When charging of USB device is completed (UC18YSL3 only) | 16 | 15 |
| Selecting accessories | — | 16 |


## LED LIGHT WARNING SIGNALS (Fig. 17)

This product features functions that are designed to protect the tool itself as well as the battery. While the switch is pulled, if any of the safeguard functions are triggered during operation, the LED light will blink as described in **Table 5**. When any of the safeguard functions are triggered, immediately remove your finger from the switch and follow the instructions described under corrective action.

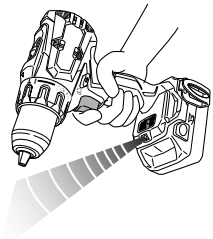

**Fig. 17**

**Table 5**

| Safeguard Function | LED Light Display | Corrective Action |
|---|---|---|
| Overburden Protection | On 0.1 second/off 0.1 second | If the operating with the shift knob set on HIGH, adjust to LOW and continue operation. Remove the cause of the overburdening. |
| Temperature Protection | On 0.5 second/off 0.5 second | Allow the tool and battery to thoroughly cool. |

## MAINTENANCE AND INSPECTION

1. **Inspecting the tool**
   Since use of as dull tool will degrade efficiency and cause possible motor malfunction, sharpen or replace the tool as soon as abrasion is noted.
2. **Inspecting the mounting screws**
   Regularly inspect all mounting screws and ensure that they are properly tightened. Should any of the screws be loose, retighten them immediately. Failure to do so could result in serious hazard.
3. **Maintenance of the motor**
   The motor unit winding is the very “heart” of the power tool. Exercise due care to ensure the winding does not become damaged and/or wet with oil or water.
4. **Cleaning on the outside**
   When the power tool is stained, wipe with a soft dry cloth or a cloth moistened with soapy water. Do not use chloric solvents, gasoline or paint thinner, for they melt plastics.
5. **Storage**
   Store the power tool in a place in which the temperature is less than 40°C and out of reach of children.

**NOTE**

Storing lithium-ion batteries.
Make sure the lithium-ion batteries have been fully charged before storing them.
Prolonged storage (3 months or more) of batteries with a low charge may result in performance deterioration, significantly reducing battery usage time or rendering the batteries incapable of holding a charge.
However, significantly reduced battery usage time may be recovered by repeatedly charging and using the batteries two to five times.
If the battery usage time is extremely short despite repeated charging and use, consider the batteries dead and purchase new batteries.

**CAUTION**

In the operation and maintenance of power tools, the safety regulations and standards prescribed in each country must be observed.

**Important notice on the batteries for the HiKOKI cordless power tools**
Please always use one of our designated genuine batteries. We cannot guarantee the safety and performance of our cordless power tool when used with batteries other than these designated by us, or when the battery is disassembled and modified (such as disassembly and replacement of cells or other internal parts).

**NOTE**

Due to HiKOKI’s continuing program of research and development, the specifications herein are subject to change without prior notice.

## TROUBLESHOOTING

Use the inspections in the table below if the tool does not operate normally. If this does not remedy the problem, consult your dealer or the HiKOKI Authorized Service Center.

| Symptom | Possible cause | Remedy |
|---|---|---|
| Tool doesn’t run | No remaining battery power | Charge the battery. |
| | Battery isn’t securely attached. | Push in the battery until a click is heard. |
| Tool suddenly stopped | Tool was overburdened | Remove the cause of the overburdening. |
| | Battery or tool overheated | Allow the tool and battery to thoroughly cool. |
| Tool bits<br>-can’t be attached<br>-fall off | The shape of the attachment portion doesn’t match | The chucking diameter of the keyless chuck is 1.5 mm to 13 mm. Use a bit that falls within the stated range. |
| | The lock of the keyless chuck is worn | Contact a HiKOKI Authorized Service Center and arrange to have the old keyless chuck replaced with a new one. |
| Switch can’t be pulled | Forward/reverse selector button is positioned halfway | Press the button firmly into position for the desired direction of rotation. |
| Screw head slips or comes loose. | Bit number doesn’t match with the screw size | Install a suitable bit. |
| | The bit is worn | Replace with a new bit. |
| Holes can’t be smoothly drilled. | The drill is worn | Replace with a new drill. |
| | Rotation speed isn’t appropriate | Adjust the rotation speed (HIGH/LOW) to match the material to be drilled. |
| | The drill is rotating in reverse | Switch to forward rotation. |

| Symptom | Possible cause | Remedy |
|---|---|---|
| <UC18YSL3><br>The charge indicator lamp is rapidly flickers purple, and battery charging doesn't begin.<br><br><UC18YFSL><br>The pilot lamp is rapidly flickers red, and battery charging doesn't begin. | The battery is not inserted all the way. | Insert the battery firmly. |
| | There is foreign matter in the battery terminal or where the battery is attached. | Remove the foreign matter. |
| <UC18YSL3><br>The charge indicator lamp blinks red, and battery charging doesn't begin.<br><br><UC18YFSL><br>The pilot lamp blinks red, and battery charging doesn't begin. | The battery is not inserted all the way. | Insert the battery firmly. |
| | The battery is overheated. | If left alone, the battery will automatically begin charging if its temperature decreases, but this may reduce battery life. It is recommended that the battery be cooled in a well-ventilated location away from direct sunlight before charging it. |
| Battery usage time is short even though the battery is fully charged. | The battery's life is depleted. | Replace the battery with a new one. |
| The battery takes a long time to charge. | The temperature of the battery, the charger, or the surrounding environment is extremely low. | Charge the battery indoors or in another warmer environment. |
| | The charger's vents are blocked, causing its internal components to overheat. | Avoid blocking the vents. |
| | The cooling fan is not running. | Contact a HiKOKI Authorized Service Center for repairs. |
| <UC18YSL3 only> | | |
| Charging of a USB device pauses midway. | The charger was plugged into an electrical socket while the USB device was being charged using the battery as the power source. | This is not a malfunction.<br>The charger pauses USB charging for about 5 seconds when it is differentiating between power sources. |
| | A battery was inserted into the charger while the USB device was being charged using a power socket as the power source. | |
| Charging of the USB device pauses midway when the battery and the USB device are being charged at the same time. | The battery has become fully charged. | This is not a malfunction.<br>The charger pauses USB charging for about 5 seconds while it checks whether the battery has successfully completed charging. |
| Charging of the USB device doesn't start when the battery and the USB device are being charged at the same time. | The remaining battery capacity is extremely low. | This is not a malfunction.<br>When the battery capacity reaches a certain level, USB charging automatically begins. |

| | | | DS18DBSL | DV18DBSL |
|---|---|---|---|---|
| V | | V | 18 | 18 |
| $n_0$ | Ls | /min | 0 - 400 | 0 - 400 |
| | Hs | /min | 0 - 1800 | 0 - 1800 |
| Bpm | Ls | /min | — | 0 - 6000 |
| | Hs | /min | — | 0 - 27000 |
| | | mm | — | 13 |
| | | mm | 50 | 50 |
| | | mm | 13 | 13 |
| | | mm | 6 | 6 |
| | | mm | 8 | 8 |
| | | mm | 1.5 - 13 | 1.5 - 13 |
| | | kg | 1.6 - 2.0 | 1.7 - 2.0 |

| | DS18DBSL, DV18DBSL | |
|---|---|---|
| | | (NN) |
| | 1 | 1 |
| UC18YSL3 / UC18YFSL | 1 | — |
| BSL1830C / BSL36A18 | 2 | — |
| | 1 | — |
| | 1 | — |

1

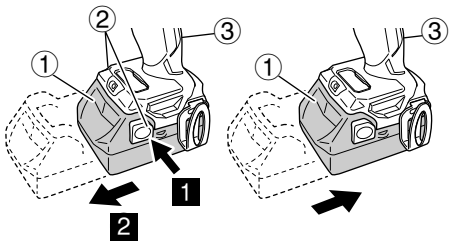


2

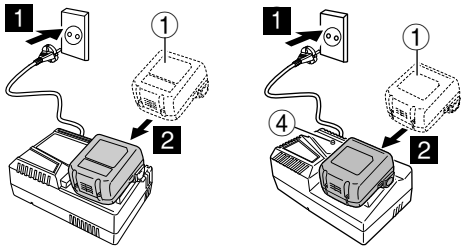


UC18YSL3 UC18YFSL

3

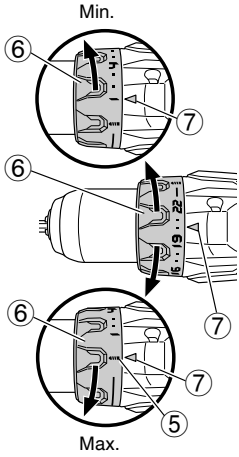


4

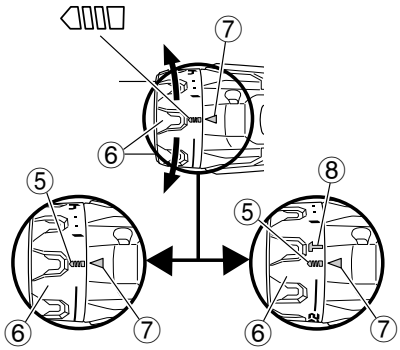


DS18DBSL DV18DBSL

5

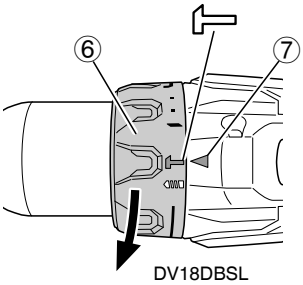


DV18DBSL

6

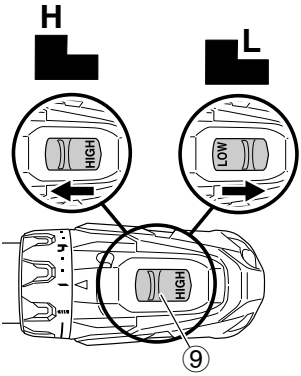

7

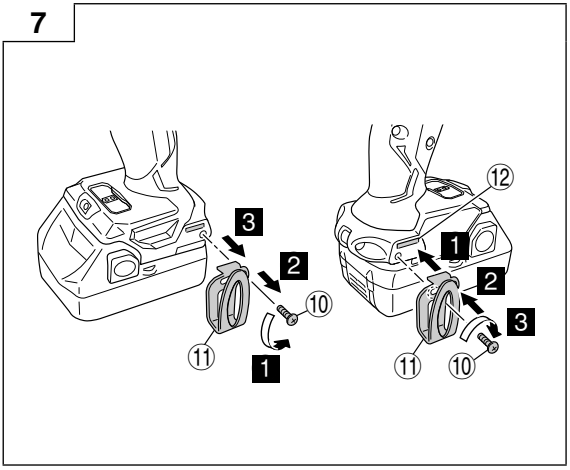


8

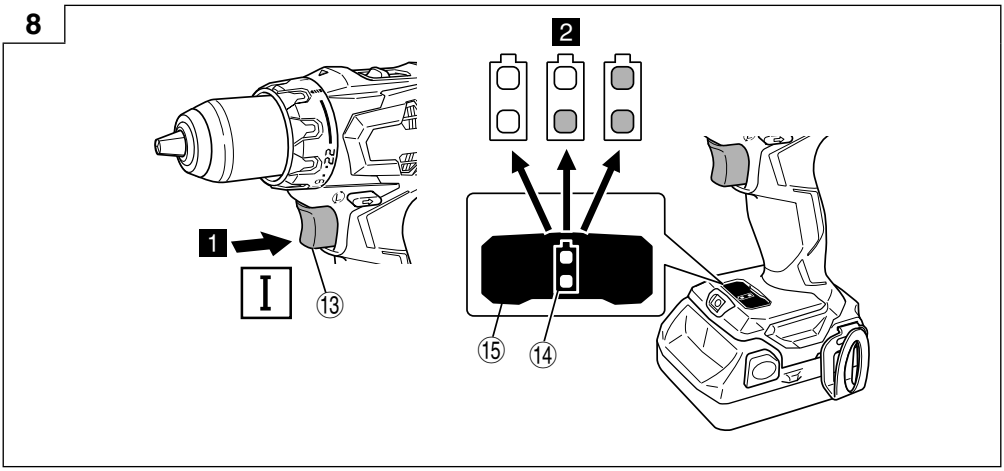


9

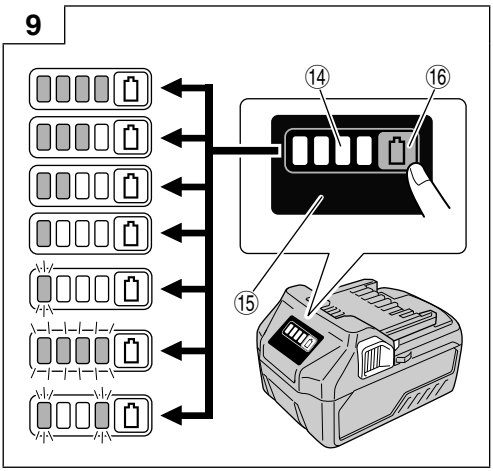


10

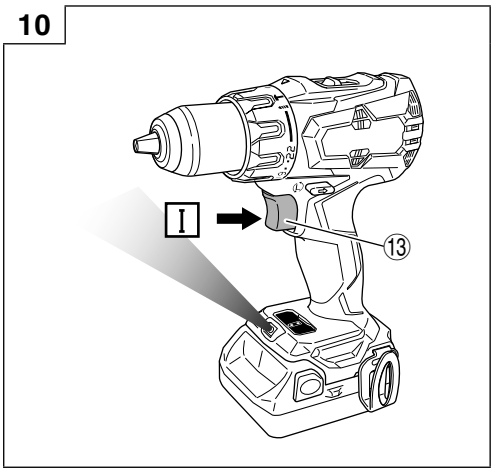

11

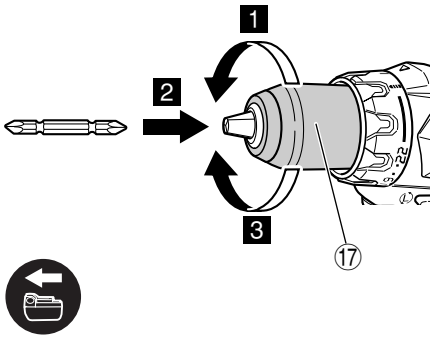


12

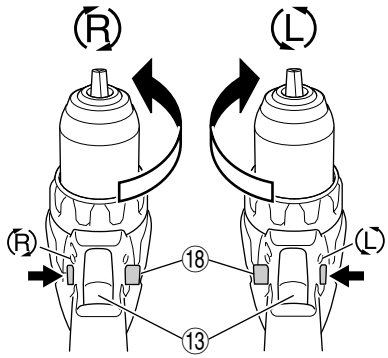


13

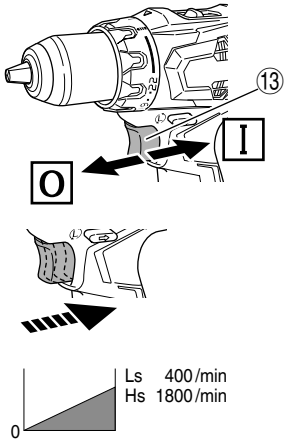


14

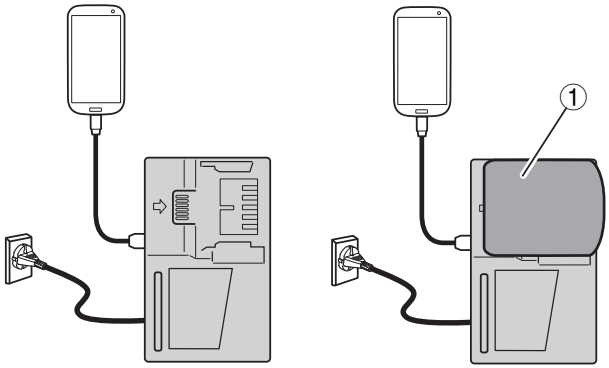

**15**

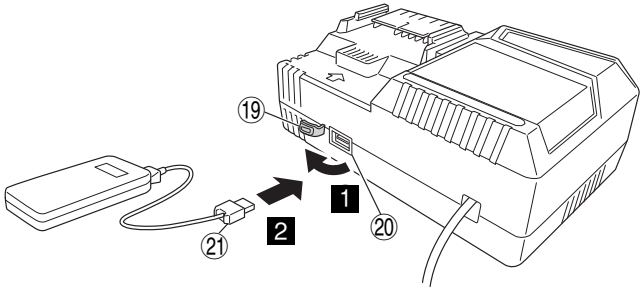


**16**

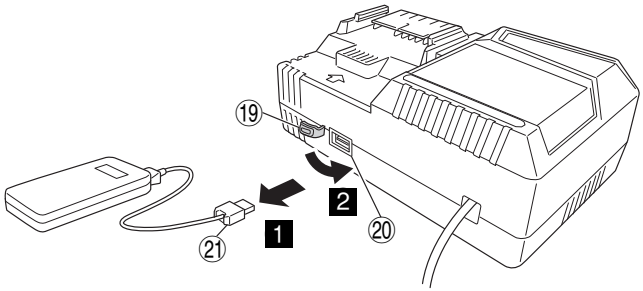

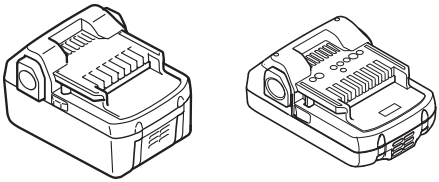

18V (Li-ion)

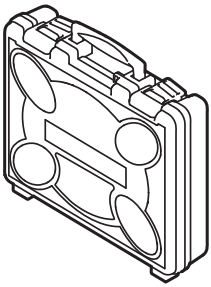

337140 / 337971

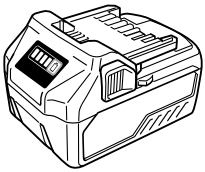

BSL36A18

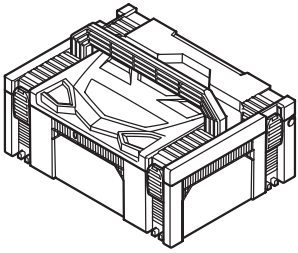

336471

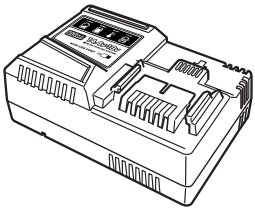

UC18YSL3 (14.4V - 18V)

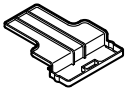

329897

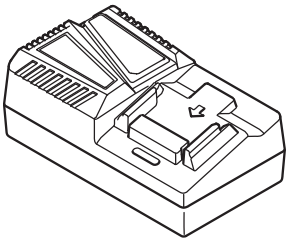

UC18YFSL (14.4V - 18V)

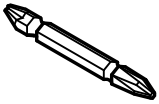

983006

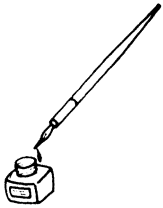

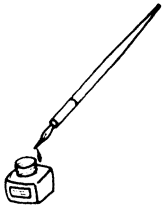

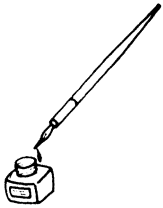

Koki Holdings Co., Ltd.

Shinagawa Intercity Tower A, 15-1, Konan 2-chome,
Minato-ku, Tokyo, Japan

811
Code No. C99718112 G
Printed in China