HiKOKI

C 6MEY

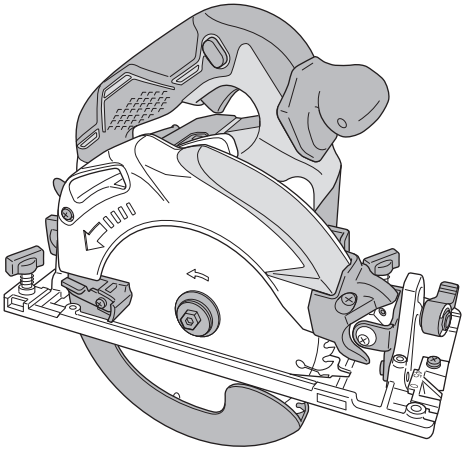

Handling instructions

GENERAL POWER TOOL SAFETY WARNINGS

⚠ **WARNING**

Read all safety warnings and all instructions.

Failure to follow the warnings and instructions may result in electric shock, fire and/or serious injury.

Save all warnings and instructions for future reference.

The term "power tool" in the warnings refers to your mains-operated (corded) power tool or battery-operated (cordless) power tool.

1) **Work area safety**
   a) **Keep work area clean and well lit.**
   Cluttered or dark areas invite accidents.
   b) **Do not operate power tools in explosive atmospheres, such as in the presence of flammable liquids, gases or dust.**
   Power tools create sparks which may ignite the dust or fumes.
   c) **Keep children and bystanders away while operating a power tool.**
   Distractions can cause you to lose control.

2) **Electrical safety**
   a) **Power tool plugs must match the outlet. Never modify the plug in any way. Do not use any adapter plugs with earthed (grounded) power tools.**
   Unmodified plugs and matching outlets will reduce risk of electric shock.
   b) **Avoid body contact with earthed or grounded surfaces, such as pipes, radiators, ranges and refrigerators.**
   There is an increased risk of electric shock if your body is earthed or grounded.
   c) **Do not expose power tools to rain or wet conditions.**
   Water entering a power tool will increase the risk of electric shock.
   d) **Do not abuse the cord. Never use the cord for carrying, pulling or unplugging the power tool. Keep cord away from heat, oil, sharp edges or moving parts.**
   Damaged or entangled cords increase the risk of electric shock.
   e) **When operating a power tool outdoors, use an extension cord suitable for outdoor use.**
   Use of a cord suitable for outdoor use reduces the risk of electric shock.
   f) **If operating a power tool in a damp location is unavoidable, use a residual current device (RCD) protected supply.**
   Use of an RCD reduces the risk of electric shock.

3) **Personal safety**
   a) **Stay alert, watch what you are doing and use common sense when operating a power tool. Do not use a power tool while you are tired or under the influence of drugs, alcohol or medication.**
   A moment of inattention while operating power tools may result in serious personal injury.
   b) **Use personal protective equipment. Always wear eye protection.**
   Protective equipment such as dust mask, non-skid safety shoes, hard hat, or hearing protection used for appropriate conditions will reduce personal injuries.
   c) **Prevent unintentional starting. Ensure the switch is in the off position before connecting to power source and/or battery pack, picking up or carrying the tool.**
   Carrying power tools with your finger on the switch or energising power tools that have the switch on invites accidents.
   d) **Remove any adjusting key or wrench before turning the power tool on.**
   A wrench or a key left attached to a rotating part of the power tool may result in personal injury.
   e) **Do not overreach. Keep proper footing and balance at all times.**
   This enables better control of the power tool in unexpected situations.
   f) **Dress properly. Do not wear loose clothing or jewellery. Keep your hair, clothing and gloves away from moving parts.**
   Loose clothes, jewellery or long hair can be caught in moving parts.
   g) **If devices are provided for the connection of dust extraction and collection facilities, ensure these are connected and properly used.**
   Use of dust collection can reduce dust-related hazards.

4) **Power tool use and care**
   a) **Do not force the power tool. Use the correct power tool for your application.**
   The correct power tool will do the job better and safer at the rate for which it was designed.
   b) **Do not use the power tool if the switch does not turn it on and off.**
   Any power tool that cannot be controlled with the switch is dangerous and must be repaired.
   c) **Disconnect the plug from the power source and/ or the battery pack from the power tool before making any adjustments, changing accessories, or storing power tools.**
   Such preventive safety measures reduce the risk of starting the power tool accidentally.
   d) **Store idle power tools out of the reach of children and do not allow persons unfamiliar with the power tool or these instructions to operate the power tool.**
   Power tools are dangerous in the hands of untrained users.
   e) **Maintain power tools. Check for misalignment or binding of moving parts, breakage of parts and any other condition that may affect the power tool's operation. If damaged, have the power tool repaired before use.**
   Many accidents are caused by poorly maintained power tools.
   f) **Keep cutting tools sharp and clean.**
   Properly maintained cutting tools with sharp cutting edges are less likely to bind and are easier to control.
   g) **Use the power tool, accessories and tool bits etc. in accordance with these instructions, taking into account the working conditions and the work to be performed.**
   Use of the power tool for operations different from those intended could result in a hazardous situation.

5) **Service**
   a) **Have your power tool serviced by a qualified repair person using only identical replacement parts.**
   This will ensure that the safety of the power tool is maintained.

PRECAUTION

Keep children and infirm persons away.

When not in use, tools should be stored out of reach of children and infirm persons.

CIRCULAR SAW SAFETY WARNINGS

Cutting procedures

a) ⚠ **DANGER: Keep hands away from cutting area and the blade. Keep your second hand on auxiliary handle, or motor housing.**
If both hands are holding the saw, they cannot be cut by the blade.

b) **Do not reach underneath the workpiece.**
The guard cannot protect you from the blade below the workpiece.

c) **Adjust the cutting depth to the thickness of the workpiece.**
Less than a full tooth of the blade teeth should be visible below the workpiece.

d) **Never hold piece being cut in your hands or across your leg. Secure the workpiece to a stable platform.**
It is important to support the work properly to minimize body exposure, blade binding, or loss of control.

e) **Hold the power tool by insulated gripping surfaces only, when performing an operation where the cutting tool may contact hidden wiring or its own cord.**
Contact with a “live” wire will also make exposed metal parts of the power tool “live” and could give the operator an electric shock.

f) **When ripping, always use a rip fence or straight edge guide.**
This improves the accuracy of cut and reduces the chance of blade binding.

g) **Always use blades with correct size and shape (diamond versus round) of arbour holes.**
Blades that do not match the mounting hardware of the saw will run eccentrically, causing loss of control.

h) **Never use damaged or incorrect blade washers or bolt.**
The blade washers and bolt were specially designed for your saw, for optimum performance and safety of operation.

Kickback causes and related warnings

- kickback is a sudden reaction to a pinched, bound or misaligned saw blade, causing an uncontrolled saw to lift up and out of the workpiece toward the operator;
- when the blade is pinched or bound tightly by the kerf closing down, the blade stalls and the motor reaction drives the unit rapidly back toward the operator;
- if the blade becomes twisted or misaligned in the cut, the teeth at the back edge of the blade can dig into the top surface of the wood causing the blade to climb out of the kerf and jump back toward the operator.

Kickback is the result of saw misuse and/or incorrect operating procedures or conditions and can be avoided by taking proper precautions as given below.

a) **Maintain a firm grip with both hands on the saw and position your arms to resist kickback forces. Position your body to either side of the blade, but not in line with the blade.**
Kickback could cause the saw to jump backwards, but kickback forces can be controlled by the operator, if proper precautions are taken.

b) **When blade is binding, or when interrupting a cut for any reason, release the trigger and hold the saw motionless in the material until the blade comes to a complete stop.**
Never attempt to remove the saw from the work or pull the saw backward while the blade is in motion or kickback may occur.
Investigate and take corrective actions to eliminate the cause of blade binding.

c) **When restarting a saw in the workpiece, centre the saw blade in the kerf and check that saw teeth are not engaged into the material.**
If saw blade is binding, it may walk up or kickback from the workpiece as the saw is restarted.

d) **Support large panels to minimise the risk of blade pinching and kickback.**
Large panels tend to sag under their own weight. Supports must be placed under the panel on both sides, near the line of cut and near the edge of the panel.

e) **Do not use dull or damaged blades.**
Unsharpened or improperly set blades produce narrow kerf causing excessive friction, blade binding and kickback.

f) **Blade depth and bevel adjusting locking levers must be tight and secure before making cut.**
If blade adjustment shifts while cutting, it may cause binding and kickback.

g) **Use extra caution when sawing into existing walls or other blind areas.**
The protruding blade may cut objects that can cause kickback.

Lower guard function

a) **Check lower guard for proper closing before each use. Do not operate the saw if lower guard does not move freely and close instantly. Never clamp or tie the lower guard into the open position.**
If saw is accidentally dropped, lower guard may be bent. Raise the lower guard with the retracting handle and make sure it moves freely and does not touch the blade or any other part, in all angles and depths of cut.

b) **Check the operation of the lower guard spring. If the guard and the spring are not operating properly, they must be serviced before use.**
Lower guard may operate sluggishly due to damaged parts, gummy deposits, or a build-up of debris.

c) **Lower guard may be retracted manually only for special cuts such as “plunge cuts” and “compound cuts”.**
Raise lower guard by retracting handle and as soon as blade enters the material, the lower guard must be released.
For all other sawing, the lower guard should operate automatically.

d) **Always observe that the lower guard is covering the blade before placing saw down on bench or floor.**
An unprotected, coasting blade will cause the saw to walk backwards, cutting whatever is in its path.
Be aware of the time it takes for the blade to stop after switch is released.

ADDITIONAL SAFETY WARNINGS

1. Use only blade diameter specified on the machine.
2. Do not use any abrasive wheel.
3. Do not use saw blades which are deformed or cracked.
4. Do not use saw blades made of high speed steel.
5. Do not use saw blades which do not comply with the characteristics specified in these instructions.
6. Do not stop the saw blades by lateral pressure on the disc.
7. Always keep the saw blades sharp.
8. Ensure that the lower guard moves smoothly and freely.
9. Never use the circular saw with its lower guard fixed in the open position.
10. Ensure that the retraction mechanism of the guard system operates correctly.
11. Wear earplugs to protect your ears during operation.
12. Never operate the circular saw with the saw blade turned upward or to the side.
13. Ensure that the material is free of foreign matters such as nails.

14. The saw blades range should be from 165 mm to 162 mm.
15. Disconnect the plug from the receptacle before carrying out any adjustment, servicing or maintenance.
16. Be careful of brake kickback.
    This circular saw features an electric brake that functions when the switch is released. As there is some kickback when the brake functions, be sure to hold the main body securely.
17. Ensure that the power source to be utilized conforms to the power requirements specified on the product nameplate.
18. Ensure that the power switch is in the OFF position.
    If the plug is connected to a receptacle while the power switch is in the ON position, the power tool will start operating immediately, which could cause a serious accident.
19. When the work area is removed from the power source, use an extension cord of sufficient thickness and rated capacity. The extension cord should be kept as short as practicable.
20. Avoid cutting in the state where the base has floated up from the material.
    When blade is binding, or when interrupting a cut for any reason, release the trigger and hold the saw motionless in the material until the blade comes to a complete stop. Never attempt to remove the saw from the work or pull the saw backward while the blade is in motion or KICKBACK may occur. Investigate and take corrective actions to eliminate the cause of blade binding.
21. Support large panels to minimize the risk of blade pinching and KICKBACK. Large panels tend to sag under their own weight (**Fig. 3**). Supports must be placed under the panel on both sides, near the line of cut and near the edge of the panel as shown in **Fig. 2**.
    To minimize the risk of blade pinching and kickback. When cutting operation requires the resting of the saw on the work piece, the saw shall be rested on the larger portion and the smaller piece cut off.
22. Use extra caution when making a “Pocket Cut” into existing walls or other blind areas. The protruding blade may cut objects that can cause KICKBACK.
    NEVER place your hand or fingers behind the saw (**Fig. 4**). If kickback occurs, the saw could easily jump backwards over your hand, possibly causing severe injury.
23. **WARNING:** It is important to support the work piece properly and to hold the saw firmly to prevent loss of control which could cause personal injury. **Fig. 5** illustrates typical hand support of the saw.
24. Place the wider portion of the saw base on that part of the work piece which is solidly supported, not on the section that will fall off when the cut is made. As examples, **Fig. 6** illustrates the RIGHT way to cut off the end of board, and **Fig. 7** the WRONG way. If the work piece is short or small, clamp is down.
    DON’T TRY TO HOLD SHORT PLACES BY HAND!
25. Never attempt to saw with the circular saw held upside down in a vise. This is extremely dangerous and can lead to serious accidents (**Fig. 8**).
26. Should lever remain loosened, it will create a very hazardous situation. Always thoroughly clamp it. (**Fig. 12**)
27. It is very hazardous to allow wing bolt to remain loosened. Always thoroughly clamp it. (**Fig. 23**)
28. Prior to cutting operation, make sure the material you are going to cut. If the material to be cut is expected to generate harmful / toxic dusts, make sure the dust bag or appropriate dust extraction system is connected with dust outlet tightly.
    Wear the dust mask additionally, if available.
    - Before starting to saw, confirm that the saw blade has attained full-speed revolution.
    - Should the saw blade stop or make an abnormal noise while operating, promptly turn OFF the switch.
    - Always take care in preventing the power cord from coming near to the revolving saw blade.
    - Using the circular saw with the saw blade facing upwards or sideways is very hazardous. Such uncommon applications should be avoided.
    - When cutting materials, always wear protective glasses.
    - When finished with a job, pull out the plug from the receptacle.
29. After having attached the saw blade, reconfirm that the lock lever is firmly secured in the prescribed position.
30. Do not expose directly your eye to the light by looking into the light.
    If your eye is continuously exposed to the light, your eye will be hurt.
31. RCD
    The use of a residual current device with a rated residual current of 30 mA or less at all times is recommended.

NAMES OF PARTS (Fig. 1 – Fig. 27)

①	Switch
②	Switch lock
③	Cutting depth lever
④	Incline wing nut
⑤	Guide fastener wing bolt
⑥	Lower guard
⑦	Bolt
⑧	Washer (B)
⑨	Saw blade
⑩	Guide piece
⑪	Base
⑫	Incline lever
⑬	Lock lever
⑭	Guide fastener wing bolt
⑮	Stopper lever
⑯	LED light
⑰	Cord holder
⑱	Handle
⑲	Mode selector switch
⑳	Silent mode indicator lamp
㉑	Lighting switch
㉒	Long guide
㉓	Guide
㉔	Fluorine plate
㉕	Dust collection adapter
㉖	Box wrench
㉗	Washer (A)

SYMBOLS

WARNING

The following show symbols used for the machine. Be sure that you understand their meaning before use.

	C6MEY: Circular Saw
	To reduce the risk of injury, user must read instruction manual.
	Always wear eye protection.
	Always wear hearing protection.
V	Rated voltage
n_0	No-load speed
I	Switching ON
O	Switching OFF
	Disconnect mains plug from electrical outlet
	Mode selector switch
	Lighting switch
	Prohibited action
	Class II tool

STANDARD ACCESSORIES

In addition to the main unit (1 unit), the package contains the accessories listed on page 7.

Standard accessories are subject to change without notice.

APPLICATIONS

Cutting various types of wood.

SPECIFICATIONS

Model			C6MEY
Voltage (by areas)*			(230 V, 240 V) ~
Power Input			1050 W
No-Load Speed			4100 /min (Power mode) 2500 /min (Silent mode)
Capacity	Cutting depth	90°	66 mm
		45°	45 mm
Weight			2.8 kg

* Be sure to check the nameplate on product as it is subject to change by areas.

NOTE

Due to HiKOKI's continuing program of research and development, the specifications herein are subject to change without prior notice.

Electronic control

- Soft-start
- Overload protection
  This protection feature cuts off the power to the motor in the event of overloading of motor or a conspicuous reduction in rotational speed during operation.
  When the overload protection feature has been activated, the motor may stop.
  In this case, release the tool switch and eliminate causes of overloading.
  After that you can use it again.
- Overheat protection
  This protection feature cuts off the power to the motor and stops the power tool in the event of overheating of motor during operation.
  When the overheat protection feature has been activated, the motor may stop.
  In this case, release the tool switch and cool it down in a few minutes.
  After that you can use it again.
- Rotation speed changeover function (Power mode / Silent mode)
  (Power mode / Silent mode switch function)
  Each press of the Mode Selector Switch changes the operating mode. (**Fig. 15**)
  Silent mode reduces maximum motor RPM enabling efficient work with less noise.
  The Silent Mode Indicator Lamp lights in Silent mode.
  When the load increases during Silent mode, the tool will automatically switch to Power mode and revert back to Silent mode when the load decreases.
  In Power mode, no change is made to Silent mode even when the load decreases.

NOTE

- To enable mode changes, pull the switch once after connecting the main plug.
- Do not give a strong shock to the switch panel or break it. It may lead to a trouble.

MOUNTING AND OPERATION

Action	Figure	Page
Fine tuning of parallelism	9	9
Fine tuning of perpendicularity	10	9
Fine tuning of guide piece position	11	9
Adjusting the cutting depth	12	10
Cutting line	13	10
Switch operation	14	10
About the mode select function (*1)	15	10
Using the LED light	16	10
Using the cord holder	17	10
Attaching the long guide (sold separately)	18	11
Attaching the guide (sold separately)	19	11
Attaching the fluorine plate (sold separately)	20	11
Attaching the dust collection adapter (sold separately)	21	11
Cutting at right angles	22	11
Inclined cutting (+45° direction)	23	12
Inclined cutting (–5° direction)	24	12
Dismounting the saw blade	25	13
Mounting the saw blade	26	13
Selecting accessories	—	15

(*1) About the mode select function
Each time the mode selector switch is pushed, the operation mode changes.
When Silent mode is selected, the Silent mode indicator lamp lights up.
Silent mode reduces maximum motor RPM enabling efficient work with less noise.
If the load increases while the motor is operating in Silent mode, it automatically changes to Power mode.
Additionally, if the load decreases again, it automatically returns to Silent mode.
In Power mode, no change is made to Silent mode even when the load decreases.

Mode	No-load speed
Power	4100 /min
Silent	2500 /min

NOTE
- You cannot change the mode unless the power plug is connected to a receptacle and the switch is pulled once.
- Even if the switch is turned on and off or the power plug is disconnected and connected, this unit will maintain the mode that you set.

LED LIGHT WARNING SIGNALS (Fig. 27)

This product features functions that are designed to protect the tool itself. While the switch is pulled and 3 seconds after its release, if any of the safeguard functions are triggered during operation, the LED light will blink as described in **Table 1**. When any of the safeguard functions are triggered, immediately remove your finger from the switch and follow the instructions described under corrective action.

Table 1

Safeguard Function	LED Light Display	Corrective Action
Overburden Protection	On 0.1 second/off 0.1 second	Remove the cause of the overburdening.
Temperature Protection	On 0.5 second/off 0.5 second	Allow the tool to thoroughly cool.

MAINTENANCE AND INSPECTION

1. **Inspecting the saw blade**
   Since use of as dull saw blade will degrade efficiency and cause possible motor malfunction, sharpen or replace the saw blade as soon as abrasion is noted.
2. **Inspecting the mounting screws**
   Regularly inspect all mounting screws and ensure that they are properly tightened. Should any of the screws be loose, retighten them immediately. Failure to do so could result in serious hazard.
3. **Maintenance of the motor**
   The motor unit winding is the very “heart” of the power tool. Exercise due care to ensure the winding does not become damaged and/or wet with oil or water.
4. **Replacing supply cord**
   If the replacement of the supply cord is necessary, this has to be done by the manufacturer of this agent in order to avoid a safety hazard.
5. **Maintenance of lower guard**
   For safe and proper working, always keep the machine and ventilation slots clean. The lower guard must always be able to more freely and retract automatically. Therefore, always keep the area around the lower guard clean. Remove dust and chips by blowing out with compressed air or with a brush.
6. **Cleaning on the outside**
   When the power tool is stained, wipe with a soft dry cloth or a cloth moistened with soapy water. Do not use chloric solvents, gasoline or paint thinner, for they melt plastics.
7. **Storage**
   Please avoid locations such as the following for the storage of products and accessories that are not being used, and store them in a safe and dry place.
   NOTE
   - Do not store them in locations where children can reach them or easily get hold of them.
   - Do not store them in locations where rain can fall such as under the eaves of a house, or where there is humidity.
   - Do not store them in locations where there are sudden changes in humidity or there is direct sunlight.
   - Do not store them in locations where there are volatile substances which have a risk of catching fire or exploding.

CAUTION
In the operation and maintenance of power tools, the safety regulations and standards prescribed in each country must be observed.

NOTE
Due to HiKOKI’s continuing program of research and development, the specifications herein are subject to change without prior notice.

			2.5 mm
C6MEY	1	1	1

1

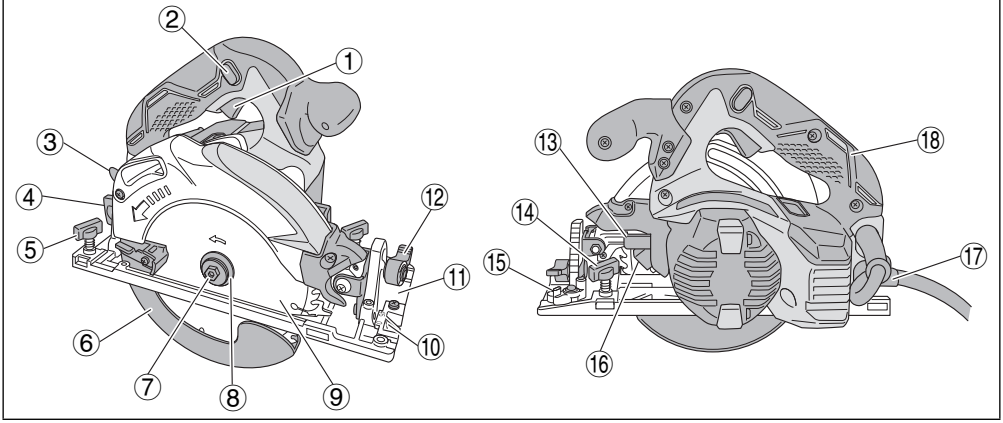

2

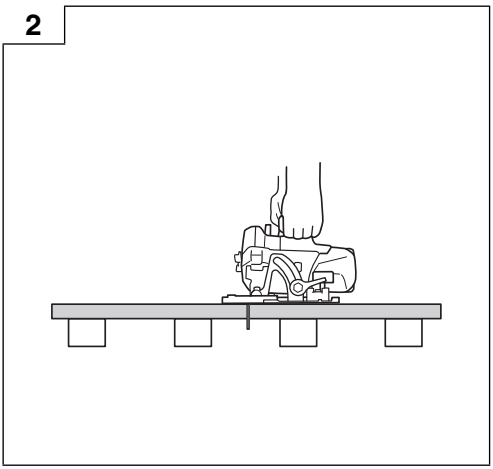

3

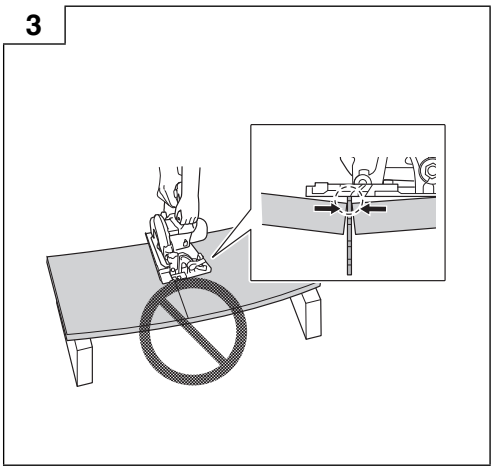

4

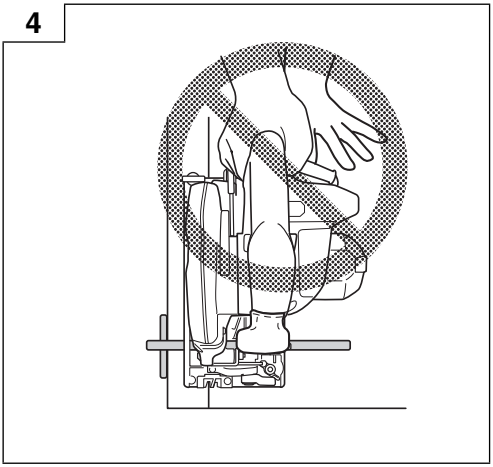

5

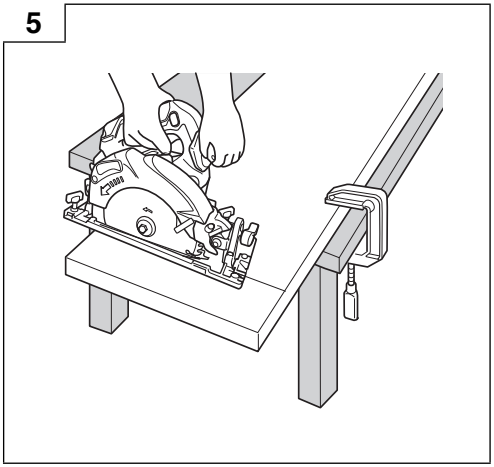

6

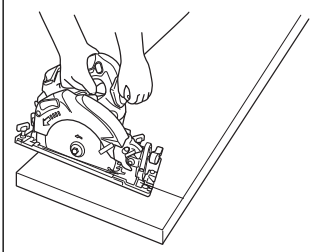

7

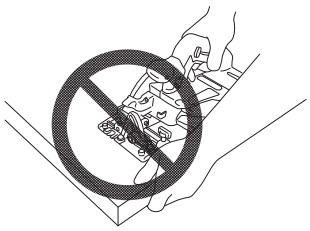

8

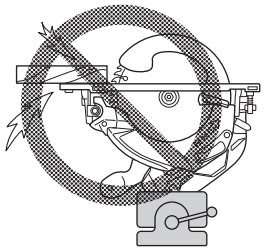

9

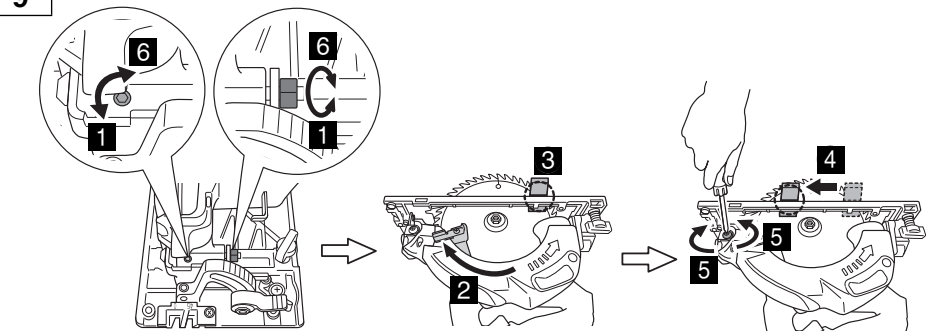

10

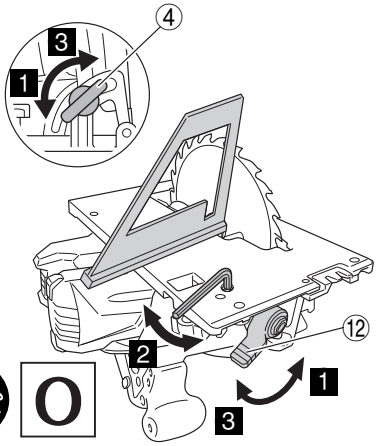

11

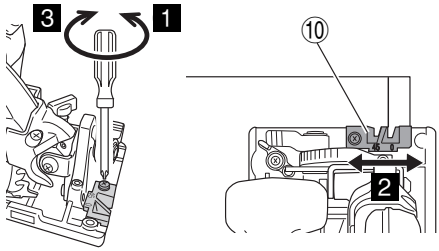

12

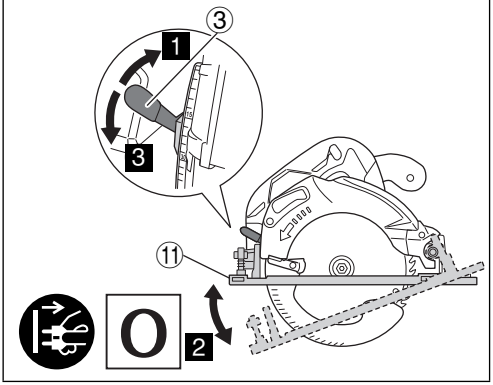

13

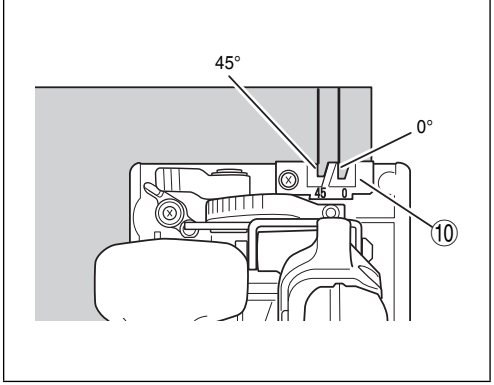

14

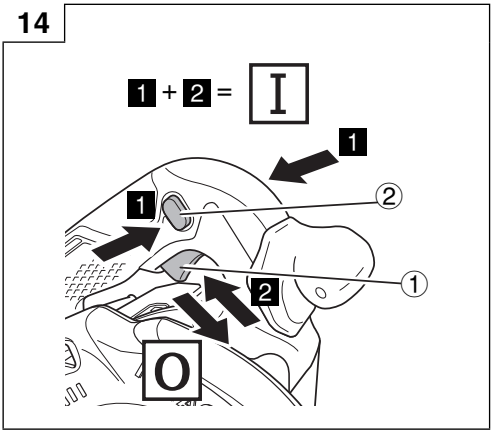

15

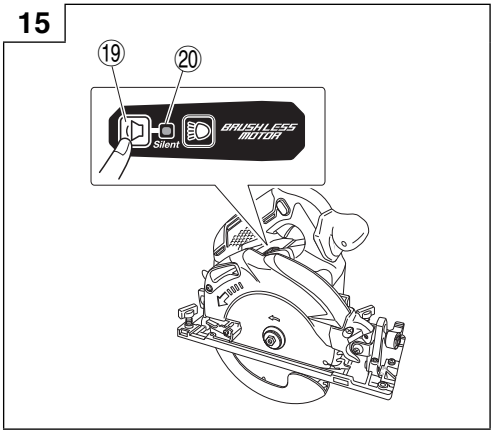

16

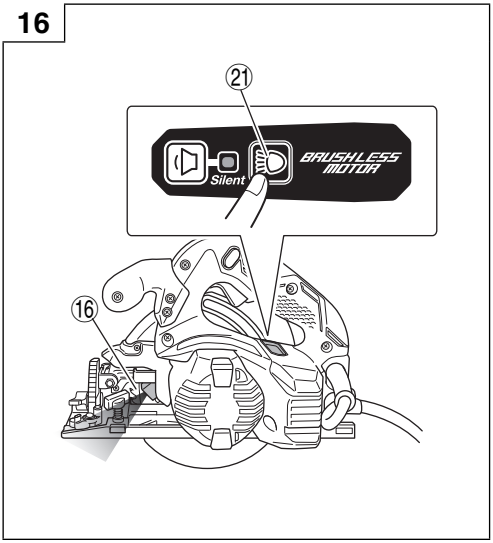

17

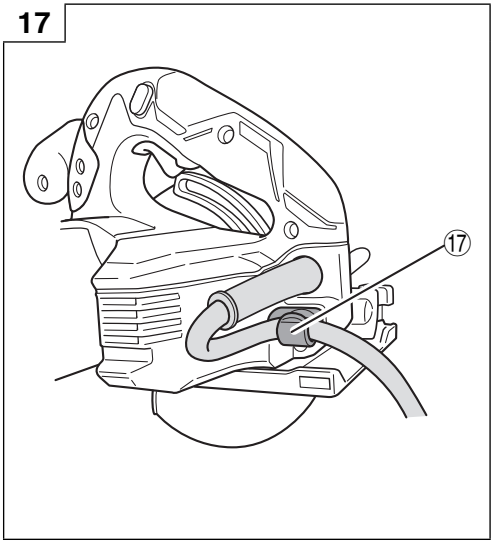

18

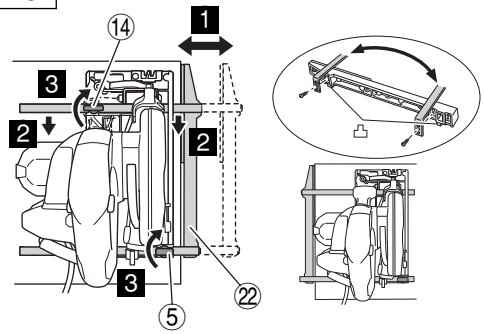

19

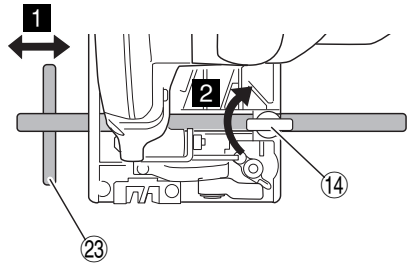

20

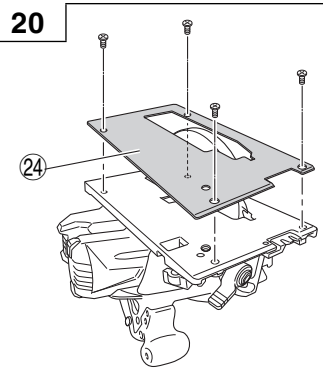

21

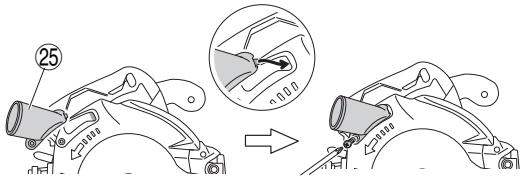

22

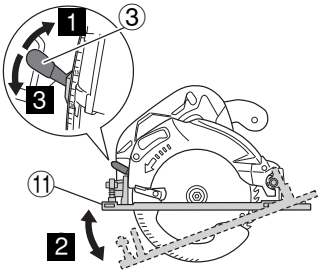

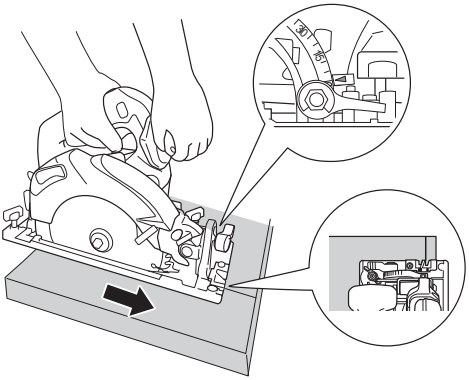

23

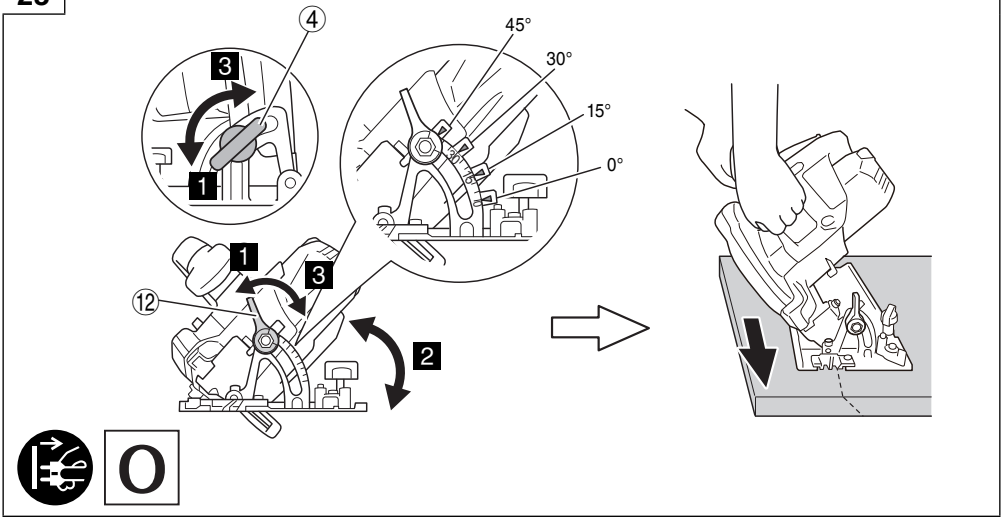

24

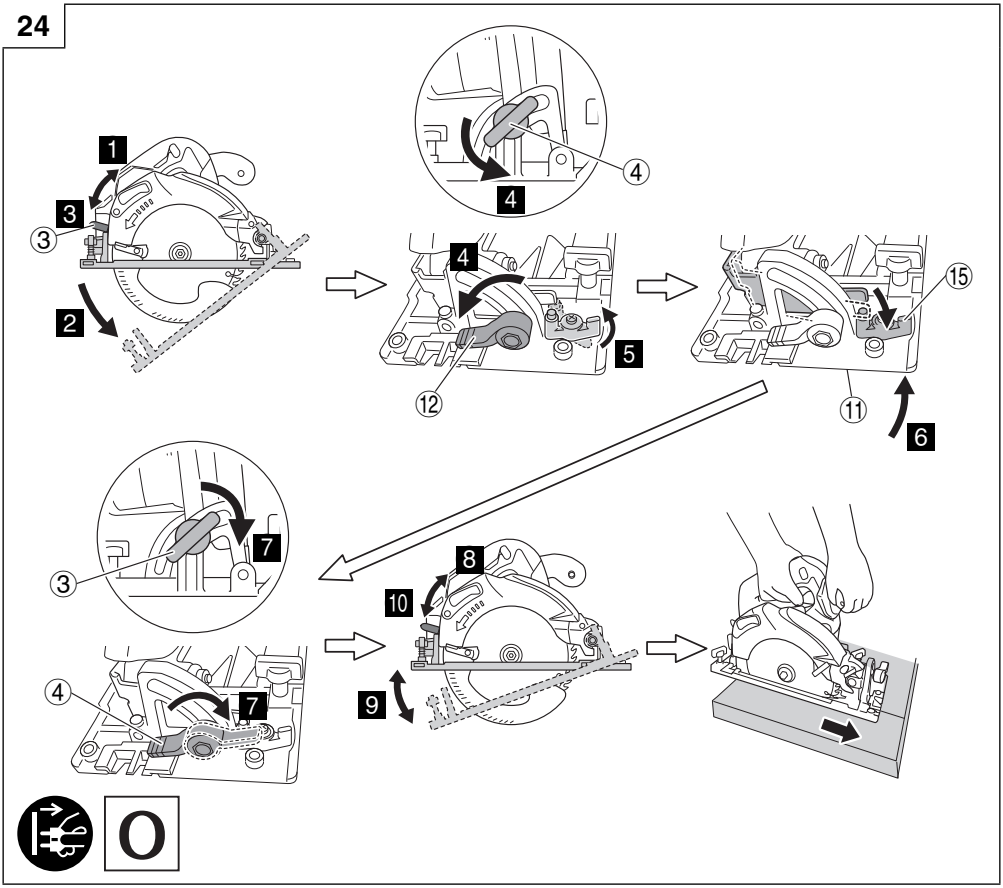

25

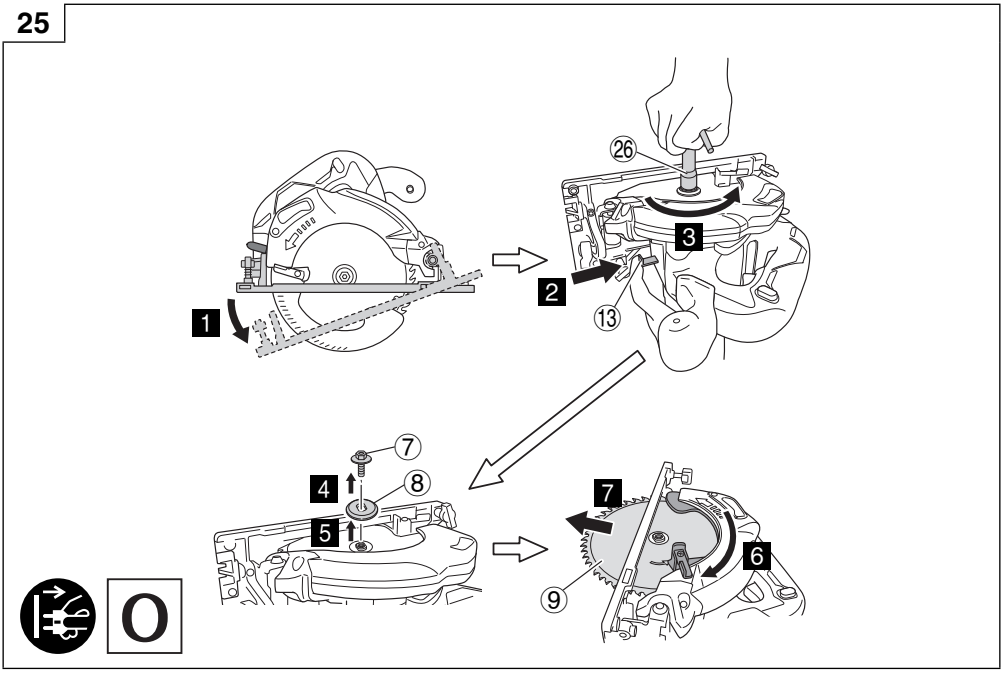

26

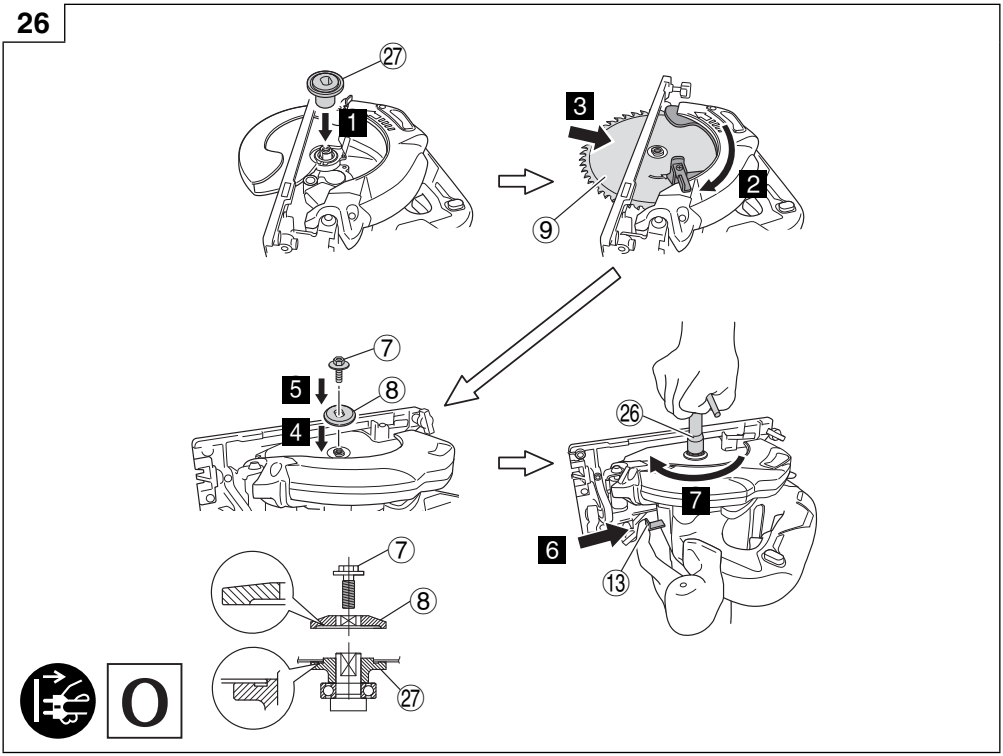

27

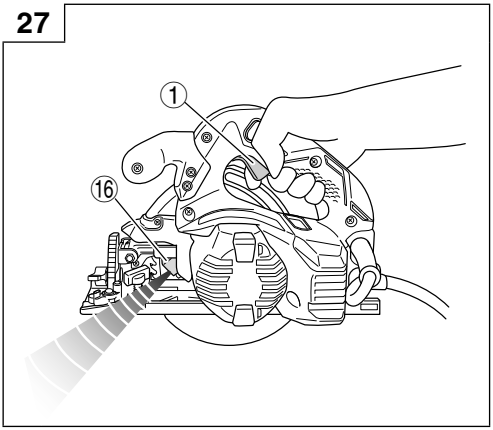

338915

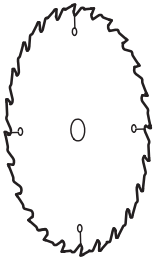

338916

338917

990666

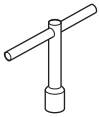

940543

302756

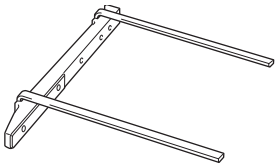

316161

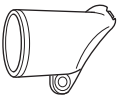

329331

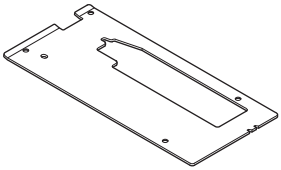

339188

Koki Holdings Co., Ltd.

Shinagawa Intercity Tower A, 15-1, Konan 2-chome,
Minato-ku, Tokyo, Japan

806
Code No. C99712713 G
Printed in China