HiKOKI

中文

English

冲击电钻
Impact Drill

DV 13SS • DV 13VSS
DV 16SS • DV 16VSS

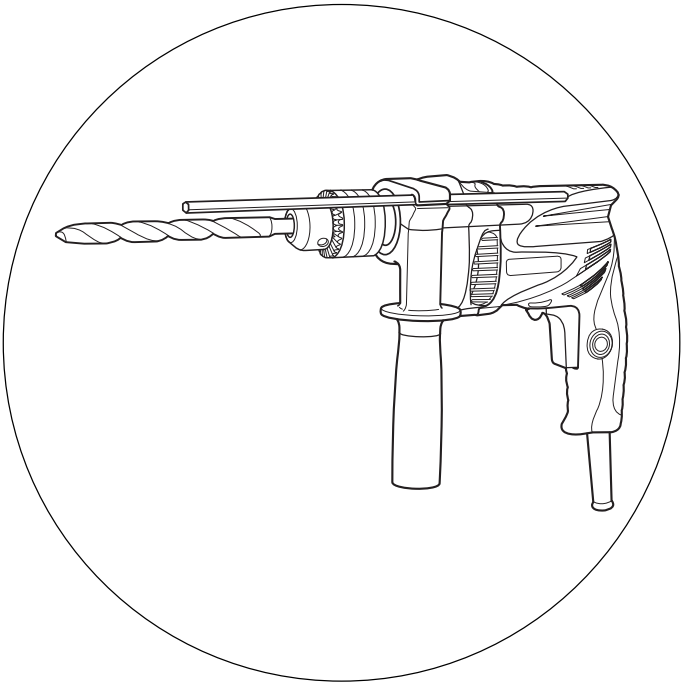

保留备用
Keep for future reference

使用说明书
Handling instructions

目次

电动工具通用安全警告

⚠警告！

阅读随电动工具提供的所有安全警告、说明、图示和规定。
不遵照以下所列说明会导致电击、着火和 / 或严重伤害。
保存所有警告和说明书以备查阅。
警告中的术语“电动工具”是指市电驱动（有线）电动工具或电池驱动（无线）电动具。

1）工作场地的安全
   a）**保持工作场地清洁和明亮。**
      杂乱和黑暗的场地会引发事故。
   b）**不要在易爆环境，如有易燃液体、气体或粉尘的环境下操作电动工具。**
      电动工具产生的火花会点燃粉尘或气体。
   c）**操作电动工具时，远离儿童和旁观者。**
      注意力不集中会使你失去对工具的控制。

2）电气安全
   a）**电动工具插头必须与插座相配。绝不能以任何方式改装插头。需接地的电动工具不能使用任何转换插头。**
      未经改装的插头和相配的插座将降低电击风险。
   b）**避免人体接触接地表面，如管道、散热片和冰箱。**
      如果你身体接触接地表面会增加电击风险。
   c）**不得将电动工具暴露在雨中或潮湿环境中。**
      水进入电动工具将增加电击风险。
   d）**不得滥用软线。绝不能用软线搬运、拉动电动工具或拔出其插头。使软线远离热源、油、锐边或运动部件。**
      受损或缠绕的软线会增加电击风险。
   e）**当在户外使用电动工具时，使用适合户外使用的延长线。**
      适合户外使用的电线将降低电击风险。

f) 如果无法避免在潮湿环境中操作电动工具，应使用带有剩余电流装置（RCD）保护的电源。
RCD 的使用可降低电击风险。

3）人身安全

a) 保持警觉，当操作电动工具时关注所从事的操作并保持清醒。当你感到疲倦，或在有药物、酒精或治疗反应时，不要操作电动工具。
在操作电动工具时瞬间的疏忽会导致严重人身伤害。

b) 使用个人防护装置。始终佩戴护目镜。
防护装置，诸如适当条件下使用防尘面具、防滑安全鞋、安全帽、听力防护等装置能减少人身伤害。

c) 防止意外起动。在连接电源和 / 或电池包、拿起或搬运工具前确保开关处于关断位置。
手指放在开关上搬运工具或开关处于接通时通电会导致危险。

d) 在电动工具接通之前，拿掉所有调节钥匙或扳手。
遗留在电动工具旋转零件上的扳手或钥匙会导致人身伤害。

e) 手不要过分伸展。时刻注意立足点和身体平衡。
这样能在意外情况下能更好地控制住电动工具。

f) 着装适当。不要穿宽松衣服或佩戴饰品。让你的头发和衣服远离运动部件。
宽松衣服、佩饰或长发可能会卷入运动部件。

g) 如果提供了与排屑、集尘设备连接用的装置，要确保其连接完好且使用得当。
使用集尘装置可降低尘屑引起的危险。

h) 不要因为频繁使用工具而产生的熟悉感而掉以轻心，忽视工具的安全准则。
某个粗心的动作可能在瞬间导致严重的伤害。

4）电动工具使用和注意事项

a) 不要勉强使用电动工具，根据用途使用合适的电动工具。
选用合适的按照额定值设计的电动工具会使你工作更有效、更安全。

b) 如果开关不能接通或关断电源，则不能使用该电动工具。
不能通过开关来控制的电动工具是危险的且必须进行修理。

c) 在进行任何调节、更换附件或贮存电动工具之前，必须从电源上拔掉插头和 / 或卸下电池包（如可拆卸）。
这种防护性的安全措施降低了电动工具意外起动的风险。

d) 将闲置不用的电动工具贮存在儿童所及范围之外，并且不允许不熟悉电动工具和不了解这些说明的人操作电动工具。
电动工具在未经培训的使用者手中是危险的。

e) 维护电动工具及其附件。检查运动部件是否调整到位或卡住，检查零件破损情况和影响电动工具运行的其他状况。如有损坏，应在使用前修理好电动工具。
许多事故是由维护不良的电动工具引发的。

f) 保持切削刀具锋利和清洁。
维护良好地有锋利切削刃的刀具不易卡住而且容易控制。

g) 按照使用说明书，并考虑作业条件和要进行的作业来选择电动工具、附件和工具的刀头等。
将电动工具用于那些与其用途不符的操作可能会导致危险情况。

h) 保持手柄和握持表面干燥、清洁，不得沾有油脂。
在意外的情况下，湿滑的手柄不能保证握持的安全和对工具的控制。

5) 维修

a) 由专业维修人员使用相同的备件维修电动工具。
这将保证所维修的电动工具的安全。

注意！

不可让儿童和体弱人士靠近工作场所。
应将不使用的工具存放在儿童和体弱人士接触不到的地方。

电钻安全警告

1) 带耳罩进行冲击作业。暴露于噪声环境会导致失聪。
2) 使用辅助手柄。失控会导致人身伤害。
3) 当在钻削附件可能触及暗线或其自身导线的场合进行操作时，要通过绝缘握持面握持工具。钻削附件碰到带电导线会使工具外露的金属零件带电而使操作者受到电击。

使用冲击电钻时应注意事项

1. 使用冲击电钻时要戴好耳罩。
   暴露在噪声中会引起听力损伤。
2. 使用随工具提供的辅助手柄。
   操作失手会引起人身伤害。
3. 当在钻削附件可能触及暗线或其自身软线之处进行操作时，要通过绝缘握持面来握持工具。
   钻削附件碰到带电导线会使工具外露的金属零件带电从而使操作者受到电击。
4. 在钻入墙壁、天花板或地板之前，务必确认其中没有埋设电缆。
5. 当以冲击式模式在混凝土或类似硬质材料上钻孔时，请将旋转变速杆转到 R (右侧) 标记位置 (图 1)。

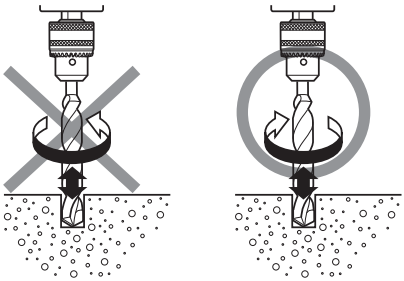

图 1

符号

警告！

如下所示的符号用于本机。使用前请务必理解其含意。

	为降低伤害风险，用户必须阅读使用说明书

规格

型式		DV13SS	DV13VSS	DV16SS	DV16VSS
电压		220 V ~			
输入功率		550 W		600 W	
反转		无	是	无	是
空载转速		2900 /min	0－2900 /min	2900 /min	0－2900 /min
电钻卡盘能力		13 mm			
能力	钢铁	13 mm			
	混凝土	13 mm		16 mm	
	木材	20 mm		25 mm	
满载冲击率		29000 /min			
重量（不含线缆）		1.4 kg		1.5 kg	

标准附件

除了主机（1 台）外，产品包中还包括表中所列的附件。

	型式	DV13SS	DV13VSS		DV16SS	DV16VSS	
	电钻卡盘规格	带键	带键	无键	带键	带键	无键
卡盘扳手		1	1	—	1	1	—
外壳		—	—	1	—	—	1
深度计		—	—	1	1	1	1
侧柄		—	—	1	1	1	1

在中国市场不销售无键式卡盘规格的钻头（包括外壳、深度计、侧柄）。

选购附件（分开销售）

○ 冲击电钻钻头（用于混凝土）
直径 3.2 mm－20 mm

用途

○ 利用 ROTATION (旋钻) 和 IMPACT (冲击) 的组合动作：
在坚硬材料 (混凝土、大理石、花岗岩、瓷砖等) 上钻孔。
○ 利用 ROTATION (旋钻) 动作：
在金属、木材和塑料上钻孔。

作业之前

1. 电源
确认所使用的电源与产品铭牌上标示的规格相符。
2. 电源开关
确认电源开关是否切断。若电源开关接通，则插头插入电源插座时电动工具将出其不意地立刻转动，从而招致严重事故。
3. 延伸线缆
若作业场所移到离开电源的地点，应使用容量足够、铠装合适的延伸线缆，并且要尽可能地短些。
4. 选择合适的钻头
○ 混凝土或石材
请使用“选购附件”一节中规定的钻头。
○ 金属或塑料
使用通常的金属用钻头。
○ 木材钻孔
使用通常的木工用钻头。
但钻开直经 6.5 mm 或更小的孔口时，宜使用金属用钻头。
5. 钻头的装配和拆卸

对于带键夹盘 (图 2)

(1) 打开夹盘钳夹，并将钻头插入夹盘。
(2) 将卡盘扳手分别放在夹盘的三个孔之上，并将其沿顺时针方向旋转 (前视)，使之固定。
(3) 要拆卸钻头时，将卡盘扳手放入夹盘上的一个孔中，并将其沿逆时针方向转动。

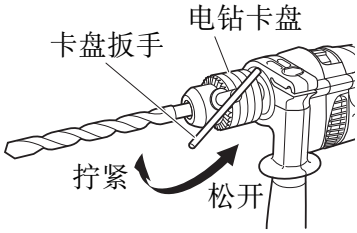

图 2

对于无键夹盘 (图 3)

(1) 打开卡盘，将钻头插入卡盘。
握住扣环，按从前面看逆时针的方向旋转套管以打开卡盘钳夹。
(2) 抓住扣环，然后按顺时针方向旋转套管。牢牢拧紧。

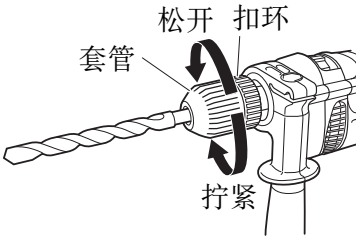

图 3

(3) 牢牢抓住扣环并按逆时针方向旋转套管将钻头拆下。

(4) 当套管变得不再松动时，把侧柄固定到扣环上，紧握侧柄，然后用手旋转套管直到松开。(图 4)

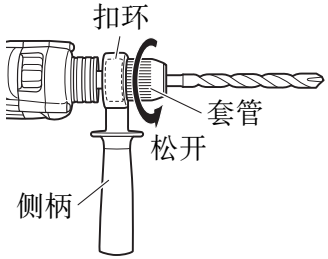

图 4

6. 确认钻头旋转方向 (图 5) (仅 DV13VSS、DV16VSS)
将旋转变速杆转到 R (左侧) 可使钻头沿顺时针方向 (后视) 旋转。
将旋转变速杆转到 L (右侧)，则钻头沿逆时针方向旋转。
(机身上有 (L) 和 (R) 标记。)

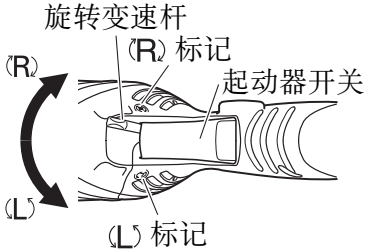

图 5

注意！

在将此电钻用作冲击电钻时，请总是以顺时针旋转来使用冲击电钻。

7. 装配侧柄 (图 6)
先将侧柄插在连接部。
然后，按顺时钟方向旋转侧柄扣，将侧柄固定住。
请将侧柄设在适合于操作的位置，然后旋紧侧柄扣。
要将深度表安装在侧柄上时，请将深度表插入侧柄上的 U 形槽内，并根据所需孔深来调节深度表的位置，然后旋紧侧柄扣。(图 7)

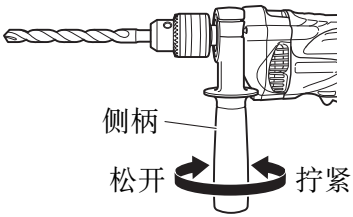

图 6

8. 冲击式到旋转式的转换 (图 8)
在右侧和左侧位置之间移动转换手柄，以在冲击式 (冲击加旋转) 和旋转式 (只旋转) 之间转换。
当在水泥、石头和砖瓦等硬质材料上钻孔时，请将转换手柄移到右侧位置 (如 T 标记所示)。钻头组合冲击和旋转两种方式工作。
在金属、木材和塑料上钻孔时，请将转换手柄移到左侧位置 (如“ ”标记所示)。钻头象普通电钻一样只是旋转。

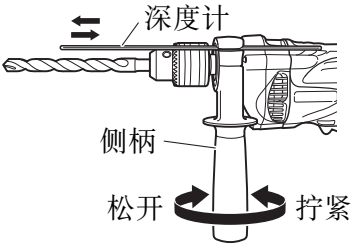

图 7

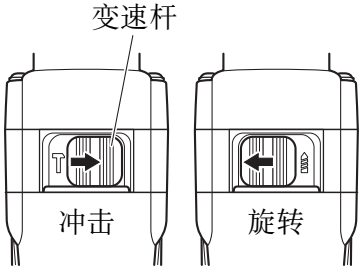

图 8

注意！

○ 若被钻的材料用平常的只旋转的方式就能钻，就不要用冲击效能。因为这种功能不仅会降低钻的效率，而且容易损坏钻头。

○ 在转换手柄处于中间位置的状态下使用冲击电钻可能导致危险发生。转换时，请务必将转换手柄移到正确位置。

使用方法

1．开关操作（图 9）

○ 按下起动器时，电钻旋转；松开起动器时，电钻停止。

○ 拉起动器并推制动器，保持开关合上状态，便于连续运转。当开关断开时，再次拉起动器便可释放制动器。

图 9

<仅 DV13VSS、DV16VSS>

○ 改变拉起动器开关的程度可以控制电钻的转速。
轻拉起动器开关转速较慢，进一步拉起动器开关则转速变快。

2．用作电钻或冲击电钻时

(1) 电钻的压力
即使过分按下电钻，施加较大的力，也不能更快地钻孔。这不仅会损坏钻头，降低工作效率，而且会缩短钻头的使用寿命。

(2) 如果发生穿孔
当穿透被钻的材质时会损坏钻头。在穿透之前减小压力至关重要。

注意！

连续操作时，完成一项钻孔工作之后要空转五秒。

(3) 使用较大的钻头时
钻头口径越大，手臂受到的反作用力也越大。必须注意不要因反作用力而失去对电钻的控制。为了获得良好的控制，脚步要站稳，双手紧握钻机，确保钻头与被钻材质保持垂直。

维护和检查

1．检查钻头
继续使用已磨损或损伤的钻头，不仅使工作效率大为降低，同时又会导致电动机过载。因此，钻头必须时常检查，并根据情况需要换新件。

2．检查安装螺钉
要经常检查安装螺钉是否紧固妥善。若发现螺钉松了，应立即重新扭紧，否则会导致严重的事故。

3. 电动机的维护
   电动机绕线是电动工具的心脏部。应仔细检查有无损伤，是否被油液或水沾湿。
4. 检查炭刷
   为了保证长期安全操作和防止触电，必须仅由经授权的HiKOKI维修服务中心检查和更换炭刷。
5. 维修零部件一览表

注意！

HiKOKI牌电动工具的维修、改造和检查须由经HiKOKI公司授权的维修中心进行。
当要求维修或其他保养服务时，若将此零部件一览表与电动工具一起呈交给经HiKOKI公司授权的维修中心，将有助于维修或保养工作。
在操作和维修电动工具时，必须遵守贵国制定的安全的有关规则和标准。

维修零部件一览表

DV13SS

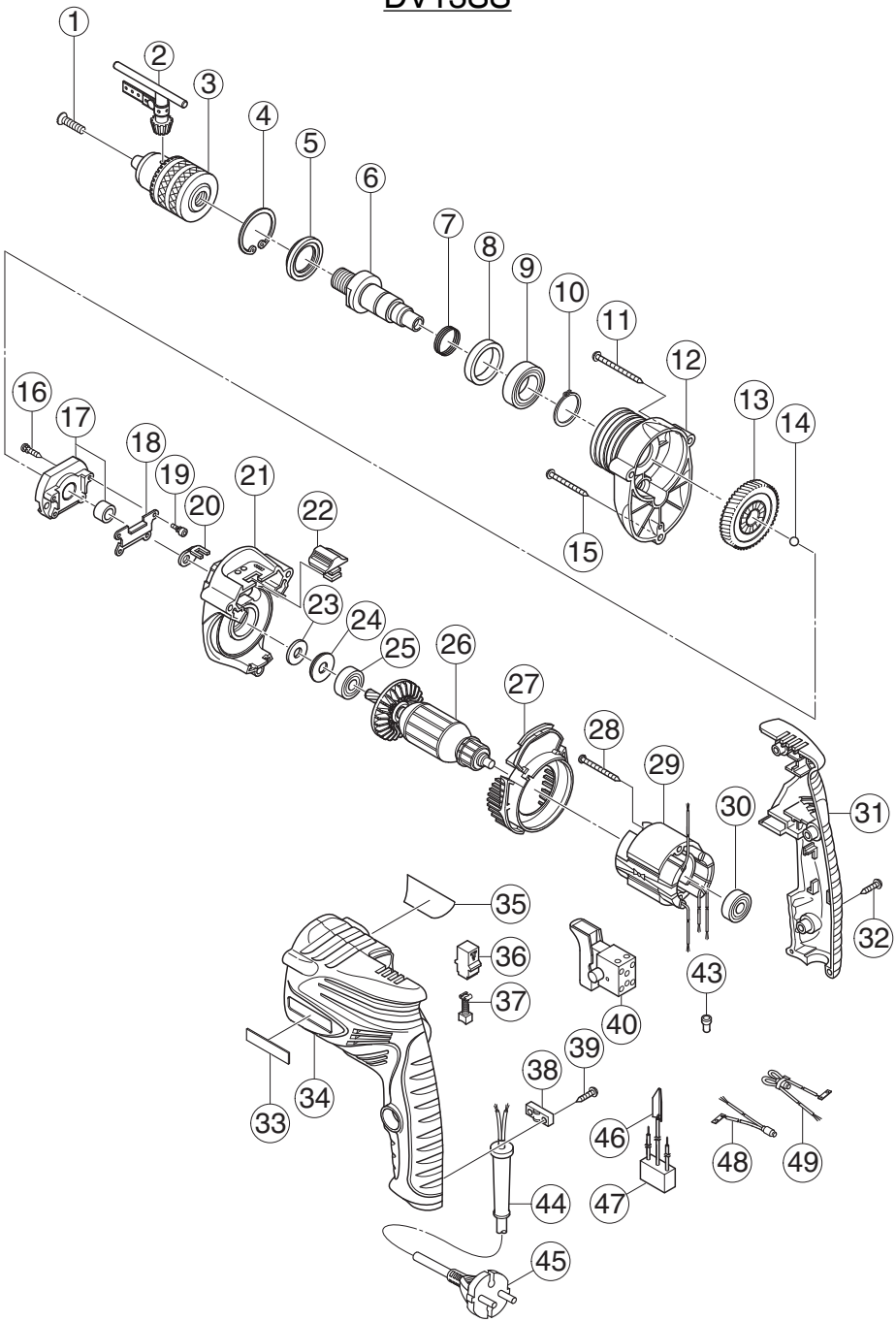

中文

项目号	代码号	使用数	备注
1	995-344	1	M6×25
2	987-576	1	
3	———	1	13VLRC-D
4	948-001	1	
5	971-654	1	
6	331-522	1	
7	322-514	1	
8	330-682	1	
9	600-2VV	1	6002VVCMPS2L
10	939-544	1	
11	322-657	2	D4×60
12	330-681	1	
13	330-683	1	
14	959-150	1	D6.35
15	301-815	1	D4×45
16	330-680	2	D4×20
17	330-677	1	
18	330-678	1	
19	330-679	4	M3
20	330-676	1	
21	330-675	1	
22	322-510	1	
23	323-096	1	
24	330-674	1	
25	608-DDM	1	608DD
26	360-864E	1	220V
27	330-673	1	
28	991-031	2	D4×45
29	340-745E	1	220V
30	608-VVM	1	608VVC2PS2L
31	330-721	1	
32	301-653	3	D4×20
33	330-719	1	
34	330-720	1	
35	———	1	
36	955-203	2	
37	999-041	2	
38	937-631	1	
39	984-750	2	D4×16
40	330-727	1	
43	959-140	2	

项目号	代码号	使用数	备注
44	938-051	1	D10.1
45	500-468Z	1	
46	992-635	1	
47	994-273	1	
48	330-723	1	
49	330-722	1	

DV13VSS

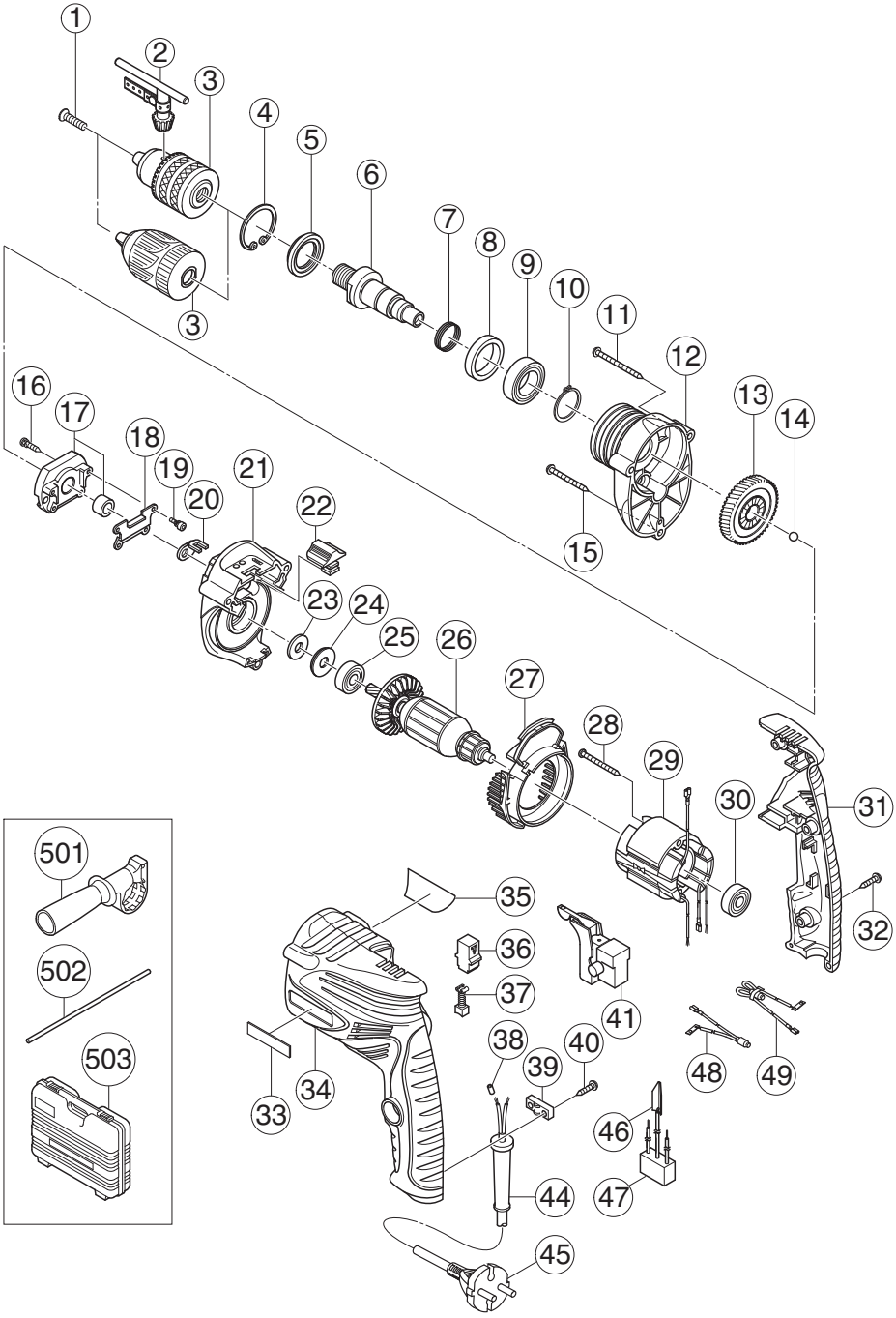
1
2
3
4
5
6
7
8
9
10
11
12
13
14
15
16
17
18
19
20
21
22
23
24
25
26
27
28
29
30
31
32
33
34
35
36
37
38
39
40
41
44
45
46
47
48
49
501
502
503

中文

项目号	代码号	使用数	备注
1	995-344	1	M6×25
2	987-576	1	
3-1	———	1	13VLRC-D
3-2	322-625	1	13VLRJ-N
4	948-001	1	
5	971-654	1	
6	331-522	1	
7	322-514	1	
8	330-682	1	
9	600-2VV	1	6002VVCMPS2L
10	939-544	1	
11	322-657	2	D4×60
12	330-681	1	
13	330-683	1	
14	959-150	1	D6.35
15	301-815	1	D4×45
16	330-680	2	D4×20
17	330-677	1	
18	330-678	1	
19	330-679	4	M3
20	330-676	1	
21	330-675	1	
22	322-510	1	
23	323-096	1	
24	330-674	1	
25	608-DDM	1	608DD
26	360-864E	1	220V
27	330-673	1	
28	991-031	2	D4×45
29	340-743E	1	220V
30	608-VVM	1	608VVC2PS2L
31	330-715	1	
32	301-653	3	D4×20
33	330-719	1	
34	330-714	1	
35	———	1	
36	955-203	2	
37	999-041	2	
38	981-373	2	
39	937-631	1	
40	984-750	2	D4×16

项目号	代码号	使用数	备注
41	330-716	1	
44	938-051	1	D10.1
45	500-468Z	1	
46	992-635	1	
47	994-273	1	
48	330-686	1	
49	330-685	1	
501	303-659	1	
502	303-709	1	
503	321-635	1	

DV16SS

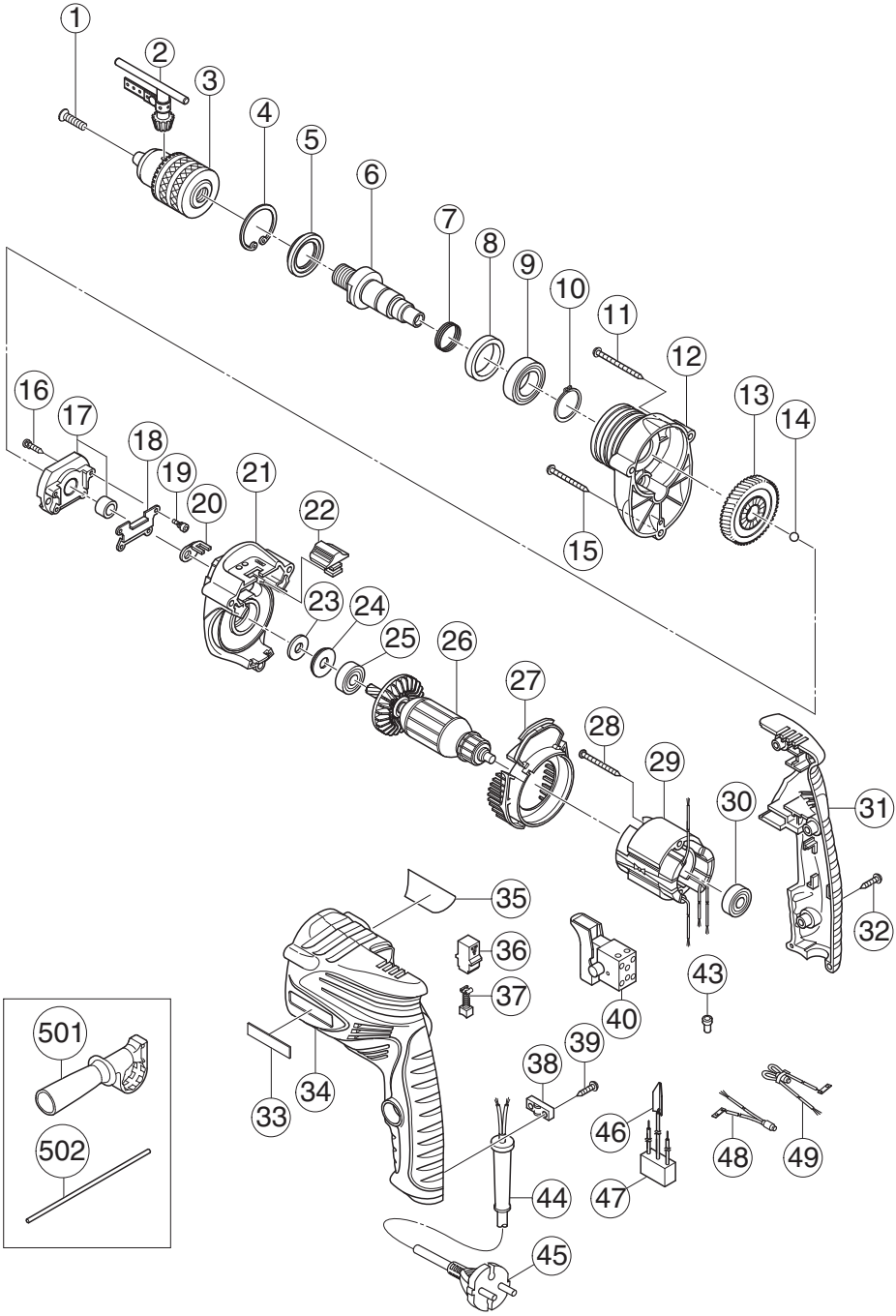
1
2
3
4
5
6
7
8
9
10
11
12
13
14
15
16
17
18
19
20
21
22
23
24
25
26
27
28
29
30
31
32
33
34
35
36
37
38
39
40
43
44
45
46
47
48
49
501
502

中文

项目号	代码号	使用数	备注
1	995-344	1	M6×25
2	987-576	1	
3	———	1	13VLRC-D
4	948-001	1	
5	971-654	1	
6	331-522	1	
7	322-514	1	
8	330-682	1	
9	600-2VV	1	6002VVCMPS2L
10	939-544	1	
11	322-657	2	D4×60
12	330-726	1	
13	330-683	1	
14	959-150	1	D6.35
15	301-815	1	D4×45
16	330-680	2	D4×20
17	330-677	1	
18	330-678	1	
19	330-679	4	M3
20	330-676	1	
21	330-675	1	
22	322-510	1	
23	323-096	1	
24	330-674	1	
25	608-DDM	1	608DD
26	360-863E	1	220V
27	330-673	1	
28	950-515	2	D4×50
29	340-744F	1	220V-240V
30	608-VVM	1	608VVC2PS2L
31	330-721	1	
32	301-653	3	D4×20
33	330-719	1	
34	330-720	1	
35	———	1	
36	955-203	2	
37	999-041	2	
38	937-631	1	
39	984-750	2	D4×16
40	330-727	1	
43	959-140	2	

项目号	代码号	使用数	备注
44	938-051	1	D10.1
45	500-468Z	1	
46	992-635	1	
47	994-273	1	
48	330-723	1	
49	330-722	1	
501	303-659	1	
502	303-709	1	

DV16VSS

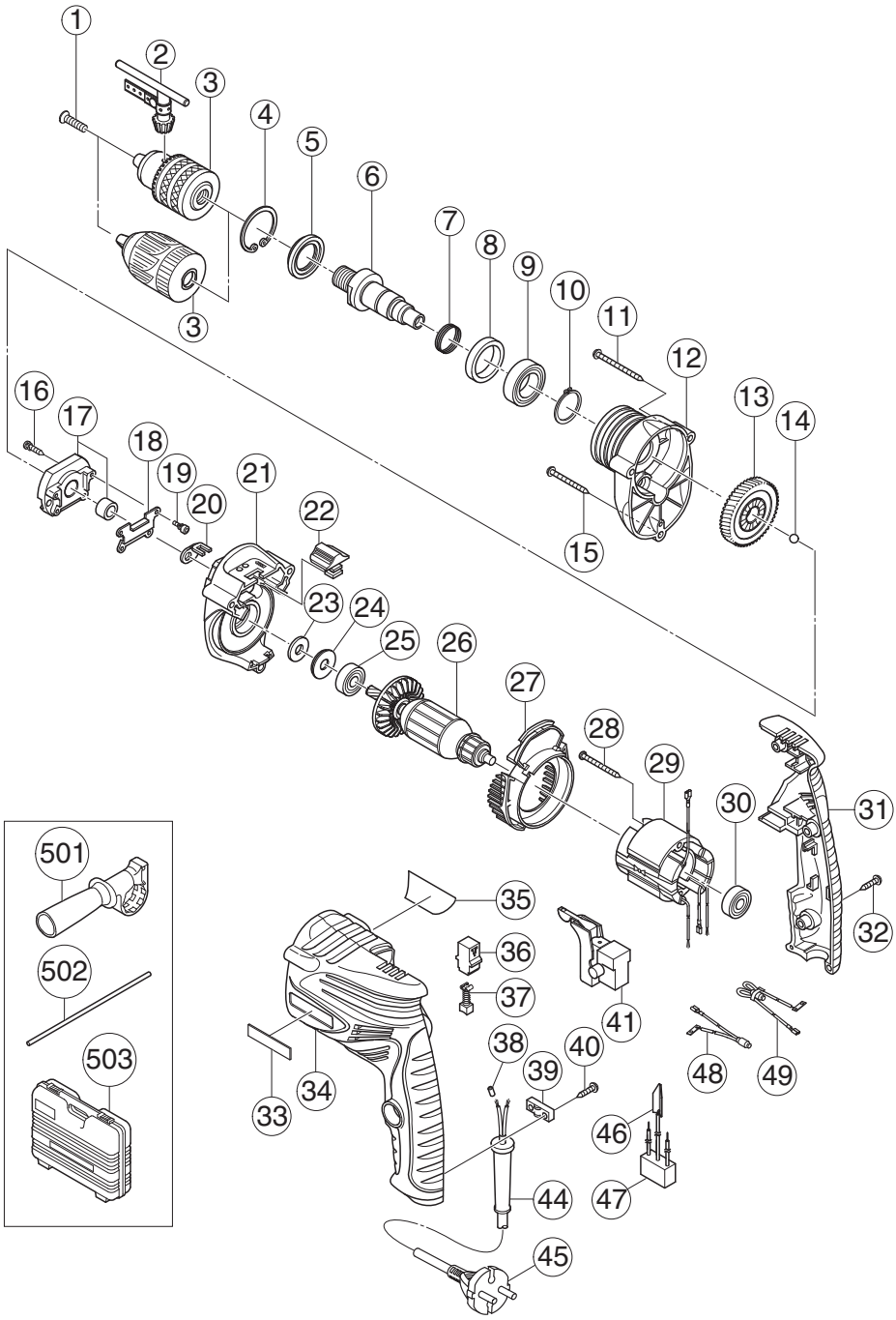
1
2
3
4
5
6
7
8
9
10
11
12
13
14
15
16
17
18
19
20
21
22
23
24
25
26
27
28
29
30
31
32
33
34
35
36
37
38
39
40
41
44
45
46
47
48
49
501
502
503

中文

项目号	代码号	使用数	备注
1	995-344	1	M6×25
2	987-576	1	
3-1	———	1	13VLRC-D
3-2	322-625	1	13VLRJ-N
4	948-001	1	
5	971-654	1	
6	331-522	1	
7	322-514	1	
8	330-682	1	
9	600-2VV	1	6002VVCMPS2L
10	939-544	1	
11	322-657	2	D4×60
12	330-726	1	
13	330-683	1	
14	959-150	1	D6.35
15	301-815	1	D4×45
16	330-680	2	D4×20
17	330-677	1	
18	330-678	1	
19	330-679	4	M3
20	330-676	1	
21	330-675	1	
22	322-510	1	
23	323-096	1	
24	330-674	1	
25	608-DDM	1	608DD
26	360-863E	1	220V
27	330-673	1	
28	950-515	2	D4×50
29	340-742F	1	220V
30	608-VVM	1	608VVC2PS2L
31	330-715	1	
32	301-653	3	D4×20
33	330-719	1	
34	330-714	1	
35	———	1	
36	955-203	2	
37	999-041	2	
38	981-373	2	
39	937-631	1	
40	984-750	2	D4×16

项目号	代码号	使用数	备注
41	330-716	1	
44	938-051	1	D10.1
45	500-468Z	1	
46	992-635	1	
47	994-273	1	
48	330-686	1	
49	330-685	1	
501	303-659	1	
502	303-709	1	
503	321-635	1	

CONTENTS

GENERAL POWER TOOL SAFETY WARNINGS

⚠ WARNING

Read all safety warnings, instructions, illustrations and specifications provided with this power tool.
Failure to follow all instructions listed below may result in electric shock, fire and/or serious injury.

Save all warnings and instructions for future reference.

The term "power tool" in the warnings refers to your mains-operated (corded) power tool or battery-operated (cordless) power tool.

1) **Work area safety**
   a) **Keep work area clean and well lit.**
   Cluttered or dark areas invite accidents.
   b) **Do not operate power tools in explosive atmospheres, such as in the presence of flammable liquids, gases or dust.**
   Power tools create sparks which may ignite the dust or fumes.
   c) **Keep children and bystanders away while operating a power tool.**
   Distractions can cause you to lose control.

2) **Electrical safety**
   a) **Power tool plugs must match the outlet. Never modify the plug in any way. Do not use any adapter plugs with earthed (grounded) power tools.**
   Unmodified plugs and matching outlets will reduce risk of electric shock.
   b) **Avoid body contact with earthed or grounded surfaces, such as pipes, radiators, ranges and refrigerators.**
   There is an increased risk of electric shock if your body is earthed or grounded.
   c) **Do not expose power tools to rain or wet conditions.**
   Water entering a power tool will increase the risk of electric shock.

d) **Do not abuse the cord. Never use the cord for carrying, pulling or unplugging the power tool.**
Keep cord away from heat, oil, sharp edges or moving parts.
Damaged or entangled cords increase the risk of electric shock.

e) **When operating a power tool outdoors, use an extension cord suitable for outdoor use.**
Use of a cord suitable for outdoor use reduces the risk of electric shock.

f) **If operating a power tool in a damp location is unavoidable, use a residual current device (RCD) protected supply.**
Use of an RCD reduces the risk of electric shock.

3) **Personal safety**

a) **Stay alert, watch what you are doing and use common sense when operating a power tool.**
Do not use a power tool while you are tired or under the influence of drugs, alcohol or medication.
A moment of inattention while operating power tools may result in serious personal injury.

b) **Use personal protective equipment. Always wear eye protection.**
Protective equipment such as a dust mask, non-skid safety shoes, hard hat or hearing protection used for appropriate conditions will reduce personal injuries.

c) **Prevent unintentional starting. Ensure the switch is in the off-position before connecting to power source and/or battery pack, picking up or carrying the tool.**
Carrying power tools with your finger on the switch or energising power tools that have the switch on invites accidents.

d) **Remove any adjusting key or wrench before turning the power tool on.**
A wrench or a key left attached to a rotating part of the power tool may result in personal injury.

e) **Do not overreach. Keep proper footing and balance at all times.**
This enables better control of the power tool in unexpected situations.

f) **Dress properly. Do not wear loose clothing or jewellery. Keep your hair and clothing away from moving parts.**
Loose clothes, jewellery or long hair can be caught in moving parts.

g) **If devices are provided for the connection of dust extraction and collection facilities, ensure these are connected and properly used.**
Use of dust collection can reduce dust-related hazards.

h) **Do not let familiarity gained from frequent use of tools allow you to become complacent and ignore tool safety principles.**
A careless action can cause severe injury within a fraction of a second.

4) **Power tool use and care**

a) **Do not force the power tool. Use the correct power tool for your application.**
The correct power tool will do the job better and safer at the rate for which it was designed.

b) **Do not use the power tool if the switch does not turn it on and off.**
Any power tool that cannot be controlled with the switch is dangerous and must be repaired.

c) **Disconnect the plug from the power source and/or remove the battery pack, if detachable, from the power tool before making any adjustments, changing accessories, or storing power tools.**
Such preventive safety measures reduce the risk of starting the power tool accidentally.

d) **Store idle power tools out of the reach of children and do not allow persons unfamiliar with the power tool or these instructions to operate the power tool.**
Power tools are dangerous in the hands of untrained users.

e) **Maintain power tools and accessories. Check for misalignment or binding of moving parts, breakage of parts and any other condition that may affect the power tool's operation. If damaged, have the power tool repaired before use.**
Many accidents are caused by poorly maintained power tools.

f) **Keep cutting tools sharp and clean.**
Properly maintained cutting tools with sharp cutting edges are less likely to bind and are easier to control.

g) **Use the power tool, accessories and tool bits etc. in accordance with these instructions, taking into account the working conditions and the work to be performed.**
Use of the power tool for operations different from those intended could result in a hazardous situation.

h) **Keep handles and grasping surfaces dry, clean and free from oil and grease.**
Slippery handles and grasping surfaces do not allow for safe handling and control of the tool in unexpected situations.

5) **Service**

a) **Have your power tool serviced by a qualified repair person using only identical replacement parts.**
This will ensure that the safety of the power tool is maintained.

CAUTION

Keep children and infirm persons away.
When not in use, tools should be stored out of reach of children and infirm persons.

DRILL SAFETY WARNINGS

1) **Wear ear protectors when impact drilling. Exposure to noise can cause hearing loss.**
2) **Use auxiliary handle(s), if supplied with the tool. Loss of control can cause personal injury.**
3) **Hold power tool by insulated gripping surfaces, when performing an operation where the cutting accessory may contact hidden wiring or its own cord. Cutting accessory contacting a “live” wire may make exposed metal parts of the power tool “live” and could give the operator an electric shock.**

PRECAUTIONS ON USING IMPACT DRILL

1. **Wear ear protectors with impact drills.**
   Exposure to noise can cause hearing loss.
2. **Use auxiliary handles supplied with the tool.**
   Loss of control can cause personal injury.
3. **Hold power tool by insulated gripping surfaces, when performing an operation where the cutting accessory may contact hidden wiring or its own cord. Cutting accessory contacting a “live” wire may make exposed metal parts of the power tool “live” and could give the operator an electric shock.**
4. **Before drilling into walls, ceilings or floors, ensure that there are no concealed power cables inside.**
5. **When boring concrete or similar hard materials in IMPACT mode, turn the rotational change lever to the R-mark. (Fig. 1)**

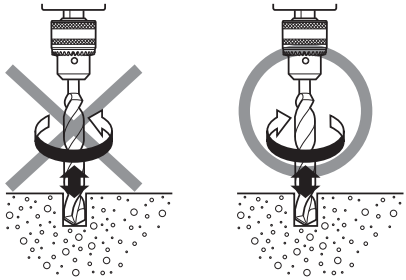

Fig. 1

SYMBOL

WARNING

The following show symbols used for the machine. Be sure that you understand their meaning before use.

	To reduce the risk of injury, user must read instruction manual.

SPECIFICATIONS

Model		DV13SS	DV13VSS	DV16SS	DV16VSS
Voltage		220 V ~			
Power input		550 W		600 W	
Reversible		None	Yes	None	Yes
No-load speed		2900 /min	0 – 2900 /min	2900 /min	0 – 2900 /min
Drill chuck capacity		13 mm			
Capacity	Steel	13 mm			
	Concrete	13 mm		16 mm	
	Wood	20 mm		25 mm	
Full load impact rate		29000 /min			
Weight (without cord)		1.4 kg		1.5 kg	

STANDARD ACCESSORIES

In addition to the main unit (1 unit), the package contains the accessories listed in the below.

	Model	DV13SS	DV13VSS		DV16SS	DV16VSS	
	Drill chuck spec.	Keyed	Keyed	Keyless	Keyed	Keyed	Keyless
Chuck wrench		1	1	—	1	1	—
Case		—	—	1	—	—	1
Depth gauge		—	—	1	1	1	1
Side handle		—	—	1	1	1	1

Note that keyless chuck specification (case, depth gauge, side handle) is NOT for sale in China.

OPTIONAL ACCESSORIES (sold separately)

○ Impact Drill Bit (for concrete)
3.2 mm – 20 mm dia.

APPLICATIONS

○ By combined actions of ROTATION and IMPACT:
Boring holes in hard materials (concrete, marble, granite, tiles, etc.)

○ By ROTATIONAL action:
Boring holes in metal, wood and plastic.

PRIOR TO OPERATION

1. Power source
Ensure that the power source to be utilized conforms to the power requirements specified on the product nameplate.
2. Power switch
Ensure that the power switch is in the OFF position. If the plug is connected to a receptacle while the power switch is in the ON position, the power tool will start operating immediately, inviting serious accident.
3. Extension cord
When the work area is removed from the power source. Use an extension cord of sufficient thickness and rated capacity. The extension cord should be kept as short as practicable.

4. Selecting the appropriate drill bit
○ When boring concrete or stone
Use the drill bits specified in the Optional Accessories.
○ When boring metal or plastic
Use an ordinary metalworking drill bit.
○ When boring wood
Use an ordinary woodworking drill bit.
However, when drilling 6.5 mm or smaller holes, use a metalworking drill bit.
5. Mounting and dismounting of the bit

For Drill chuck with chuck wrench **(Fig. 2)**

(1) Open the chuck jaws, and insert the bit into the chuck.
(2) Place the chuck wrench in each of the three holes in the chuck, and turn it in the clockwise direction (viewed from the front side). Tighten securely.
(3) To remove the bit, place the chuck wrench into one of the holes in the chuck and turn it in the counterclockwise direction.

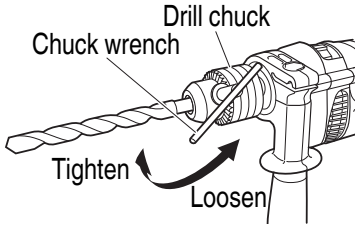

Fig. 2

For keyless chuck **(Fig. 3)**

(1) Open the chuck jaws, and insert the bit into the chuck.
To open the chuck jaws, hold the ring while turning the sleeve in the counterclockwise direction (viewed from the front side).
(2) Firmly grasp the ring and turn the sleeve in the clockwise direction. Tighten securely.
(3) To remove the bit, firmly grasp the ring and turn the sleeve in the counterclockwise direction.
(4) When the sleeve does not become loose any further, fix the side handle to retaining ring, hold side handle firmly, then turn the sleeve to loosen by hand. (**Fig. 4**)

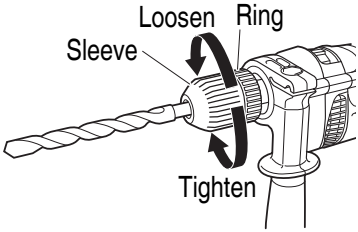

Fig. 3

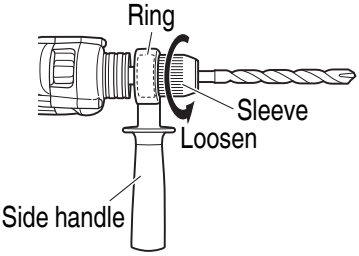

Fig. 4

6. Check the rotational direction (**Fig. 5**) (DV13VSS, DV16VSS only)
The bit rotates clockwise (viewed from the rear side) by turning the rotational change lever to R-mark.
The rotational change lever is returned to the L-mark to turn the bit counterclockwise.
(The (L) and (R) marks are provided on the body.)

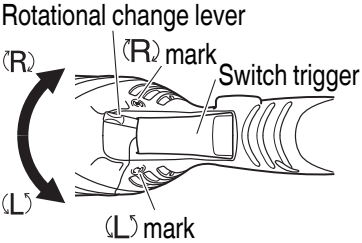

Fig. 5

CAUTION

Always use the impact drill with clockwise rotation, when using it as an impact drill.

7. Fixing the side handle (**Fig. 6**)
   Attach the side handle to the mounting part.
   Rotate the side handle grip in a clockwise direction to secure it.
   Set the side handle to a position that is suited to the operation and then securely tighten the side handle grip.
   To attach a depth gauge on the side handle, insert the gauge into the U-shaped groove on the side handle, adjust the position of the depth gauge in accordance with the desired depth of the hole, and firmly tighten the side handle grip. (**Fig. 7**)
8. IMPACT to ROTATION changeover (**Fig. 8**)
   Shift the change lever between the right and left positions to switch easily between IMPACT (rotation and impact) and ROTATION (rotation only), respectively.
   To bore holes in hard materials such as concrete, stone and tiles, shift the change lever to the right-hand position (as indicated by the T mark).
   The drill bit operates by the combined actions of impact and rotation.
   To bore holes in metal, wood and plastic, shift the change lever to the left-hand position (as indicated by the mark). The drill bit operates by rotational action only, as in the case of a conventional electric drill.

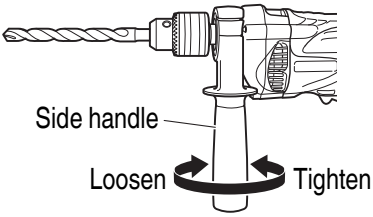

Fig. 6

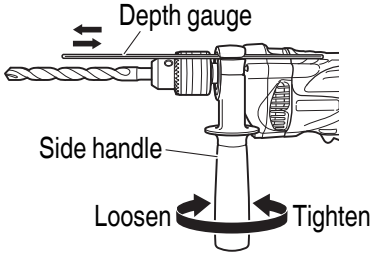

Fig. 7

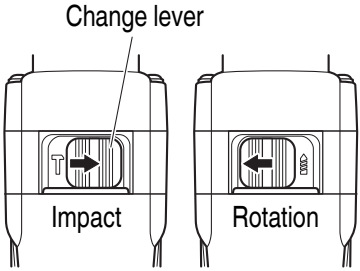

Fig. 8

CAUTION

- **Do not use the Impact Drill in the IMPACT function if the material can be bored by rotation only. Such action will not only reduce drill efficiency, but may also damage the drill tip.**
- **Operating the Impact Drill with the change lever in mid-position may result in damage. When switching, make sure that you shift the change lever to the correct position.**

HOW TO USE

1. Switch operation (**Fig. 9**)
- When the trigger is depressed, the tool rotates. When the trigger is released, the tool stops.
- Pulling the trigger and pushing the stopper, it keeps the switched-on condition which is convenient for continuous running. When switching off, the stopper can be disconnected by pulling the trigger again.

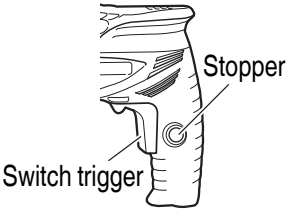

Fig. 9

<DV13VSS, DV16VSS only>

○ The rotational speed of the drill can be controlled by varying the amount that the trigger switch is pulled. Speed is low when the trigger switch is pulled slightly and increases as the trigger switch is pulled more.

2. When using as a Drill or an Impact Drill

(1) Pressing force of the drill
You cannot drill holes more quickly even if you press the drill with a stronger force than necessary. It not only damages tip of drill bit and decreases the efficiency of operation, but also shortens the life of the drill tip.

(2) In case of penetrating holes
Drill bits can be broken when the material being drilled is penetrated. It is important to decrease pressing force just before penetrating.

CAUTION

In continuous operation, conduct no-load operation for five seconds after completing a drilling job.

(3) When a thick drill bit is used
Your arm is subjected to larger reaction force when a thicker drill bit is used. Be careful not to be moved by the reaction force. For this, establish a foothold, hold the unit tightly with both hands perpendicularly to the material being drilled.

MAINTENANCE AND INSPECTION

1. Inspecting the drill bits
Since use of an abraded drill bits will cause motor malfunctioning and degraded efficiency, replace the drill bits with a new one or resharpening without delay when abrasion is noted.
2. Inspecting the mounting screws
Regularly inspect all mounting screws and ensure that they are properly tightened. Should any of the screws be loose, retighten them immediately. Failure to do so could result in serious hazard.
3. Maintenance of the motor
The motor unit winding is the very “heart” of the power tool. Exercise due care to ensure the winding does not become damaged and/or wet with oil or water.
4. Inspecting the carbon brushes
For your continued safety and electrical shock protection, carbon brush inspection and replacement on this tool should ONLY be performed by a HiKOKI AUTHORIZED SERVICE CENTER.
5. Service parts list

CAUTION

Repair, modification and inspection of HiKOKI Power Tools must be carried out by a HiKOKI Authorized Service Center.
This Parts List will be helpful if presented with the tool to the HiKOKI Authorized Service Center when requesting repair or other maintenance.
In the operation and maintenance of power tools, the safety regulations and standards prescribed in each country must be observed.

SERVICE PARTS LIST

DV13SS

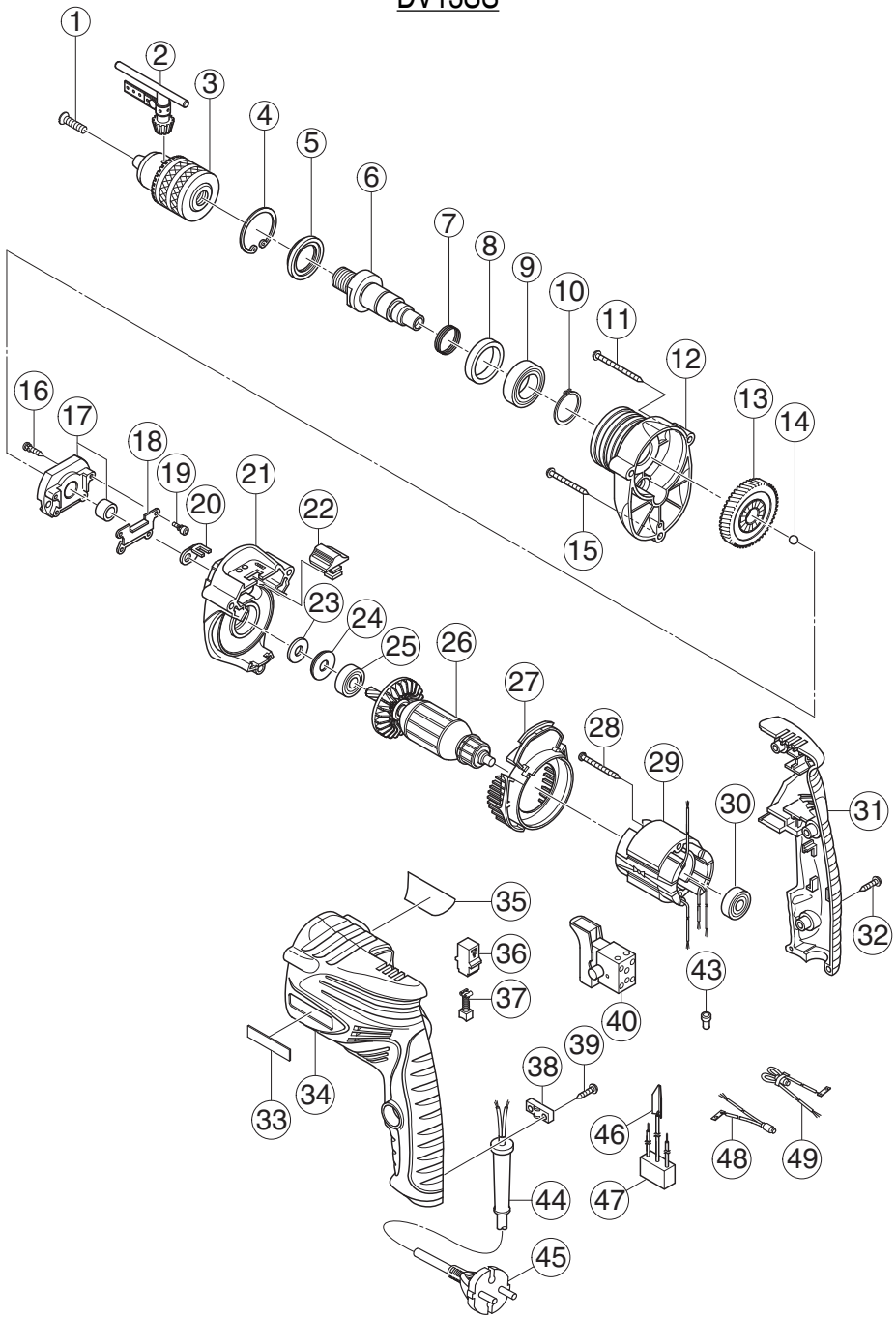

Item No.	Code No.	No. Used	Remarks
1	995-344	1	M6×25
2	987-576	1	
3	———	1	13VLRC-D
4	948-001	1	
5	971-654	1	
6	331-522	1	
7	322-514	1	
8	330-682	1	
9	600-2VV	1	6002VVCMPS2L
10	939-544	1	
11	322-657	2	D4×60
12	330-681	1	
13	330-683	1	
14	959-150	1	D6.35
15	301-815	1	D4×45
16	330-680	2	D4×20
17	330-677	1	
18	330-678	1	
19	330-679	4	M3
20	330-676	1	
21	330-675	1	
22	322-510	1	
23	323-096	1	
24	330-674	1	
25	608-DDM	1	608DD
26	360-864E	1	220V
27	330-673	1	
28	991-031	2	D4×45
29	340-745E	1	220V
30	608-VVM	1	608VVC2PS2L
31	330-721	1	
32	301-653	3	D4×20
33	330-719	1	
34	330-720	1	
35	———	1	
36	955-203	2	
37	999-041	2	
38	937-631	1	
39	984-750	2	D4×16
40	330-727	1	

Item No.	Code No.	No. Used	Remarks
43	959-140	2	
44	938-051	1	D10.1
45	500-468Z	1	
46	992-635	1	
47	994-273	1	
48	330-723	1	
49	330-722	1	

DV13VSS

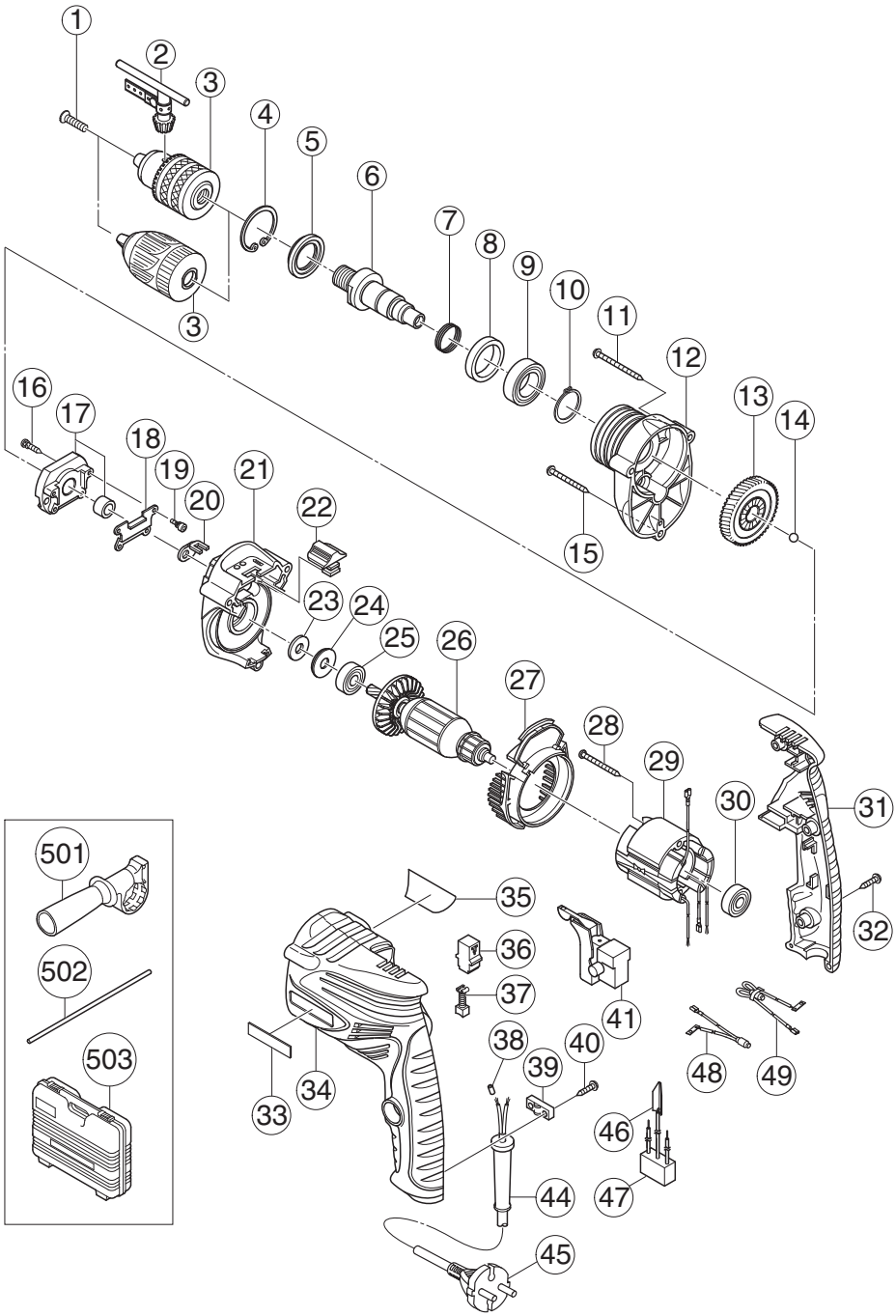
1
2
3
4
5
6
7
8
9
10
11
12
13
14
15
16
17
18
19
20
21
22
23
24
25
26
27
28
29
30
31
32
33
34
35
36
37
38
39
40
41
44
45
46
47
48
49
501
502
503

Item No.	Code No.	No. Used	Remarks
1	995-344	1	M6×25
2	987-576	1	
3-1	———	1	13VLRC-D
3-2	322-625	1	13VLRJ-N
4	948-001	1	
5	971-654	1	
6	331-522	1	
7	322-514	1	
8	330-682	1	
9	600-2VV	1	6002VVCMPS2L
10	939-544	1	
11	322-657	2	D4×60
12	330-681	1	
13	330-683	1	
14	959-150	1	D6.35
15	301-815	1	D4×45
16	330-680	2	D4×20
17	330-677	1	
18	330-678	1	
19	330-679	4	M3
20	330-676	1	
21	330-675	1	
22	322-510	1	
23	323-096	1	
24	330-674	1	
25	608-DDM	1	608DD
26	360-864E	1	220V
27	330-673	1	
28	991-031	2	D4×45
29	340-743E	1	220V
30	608-VVM	1	608VVC2PS2L
31	330-715	1	
32	301-653	3	D4×20
33	330-719	1	
34	330-714	1	
35	———	1	
36	955-203	2	
37	999-041	2	
38	981-373	2	
39	937-631	1	

Item No.	Code No.	No. Used	Remarks
40	984-750	2	D4×16
41	330-716	1	
44	938-051	1	D10.1
45	500-468Z	1	
46	992-635	1	
47	994-273	1	
48	330-686	1	
49	330-685	1	
501	303-659	1	
502	303-709	1	
503	321-635	1	

DV16SS

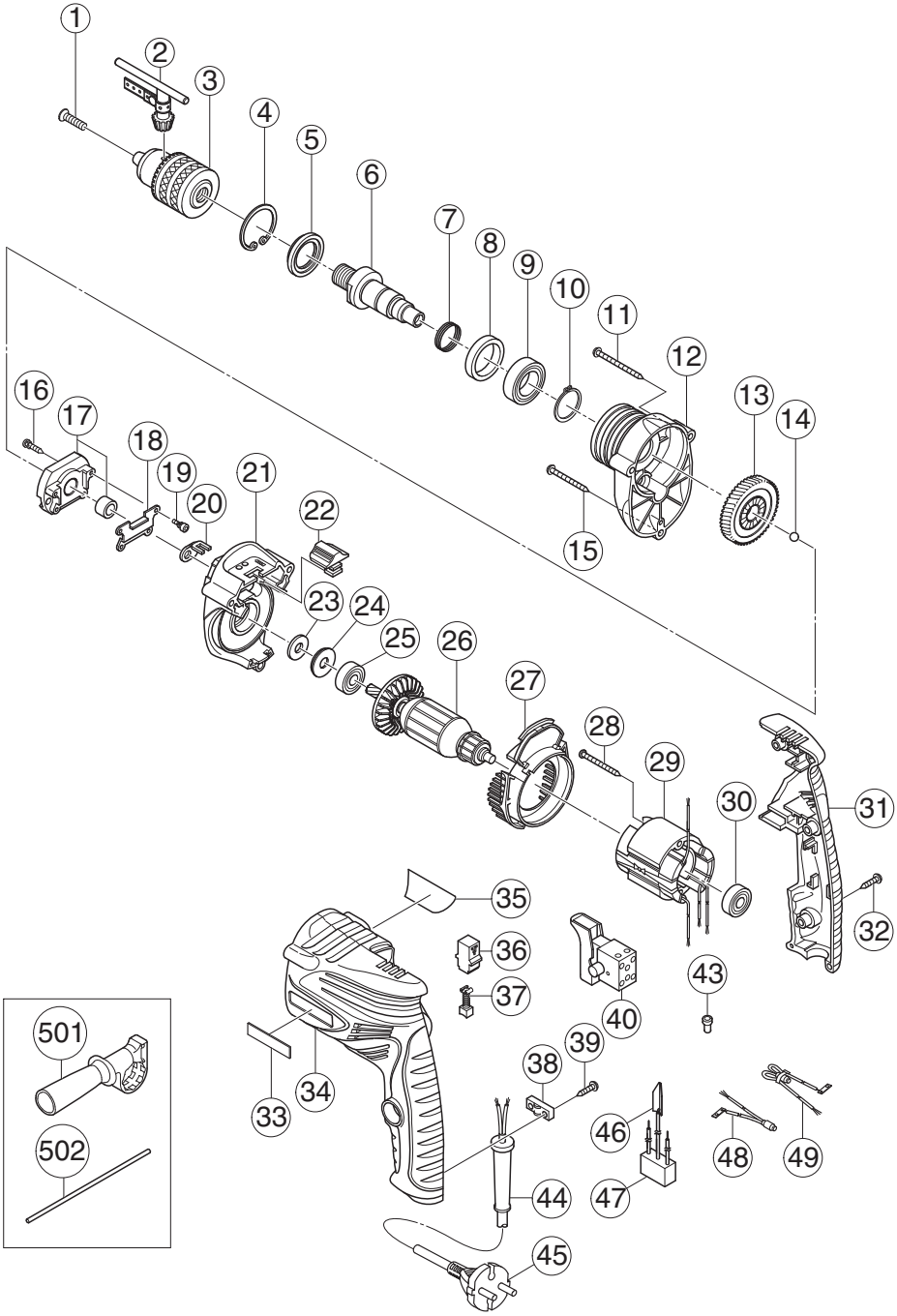
1
2
3
4
5
6
7
8
9
10
11
12
13
14
15
16
17
18
19
20
21
22
23
24
25
26
27
28
29
30
31
32
33
34
35
36
37
38
39
40
43
44
45
46
47
48
49
501
502

Item No.	Code No.	No. Used	Remarks
1	995-344	1	M6×25
2	987-576	1	
3	———	1	13VLRC-D
4	948-001	1	
5	971-654	1	
6	331-522	1	
7	322-514	1	
8	330-682	1	
9	600-2VV	1	6002VVCMPS2L
10	939-544	1	
11	322-657	2	D4×60
12	330-726	1	
13	330-683	1	
14	959-150	1	D6.35
15	301-815	1	D4×45
16	330-680	2	D4×20
17	330-677	1	
18	330-678	1	
19	330-679	4	M3
20	330-676	1	
21	330-675	1	
22	322-510	1	
23	323-096	1	
24	330-674	1	
25	608-DDM	1	608DD
26	360-863E	1	220V
27	330-673	1	
28	950-515	2	D4×50
29	340-744F	1	220V-240V
30	608-VVM	1	608VVC2PS2L
31	330-721	1	
32	301-653	3	D4×20
33	330-719	1	
34	330-720	1	
35	———	1	
36	955-203	2	
37	999-041	2	
38	937-631	1	
39	984-750	2	D4×16
40	330-727	1	

Item No.	Code No.	No. Used	Remarks
43	959-140	2	
44	938-051	1	D10.1
45	500-468Z	1	
46	992-635	1	
47	994-273	1	
48	330-723	1	
49	330-722	1	
501	303-659	1	
502	303-709	1	

DV16VSS

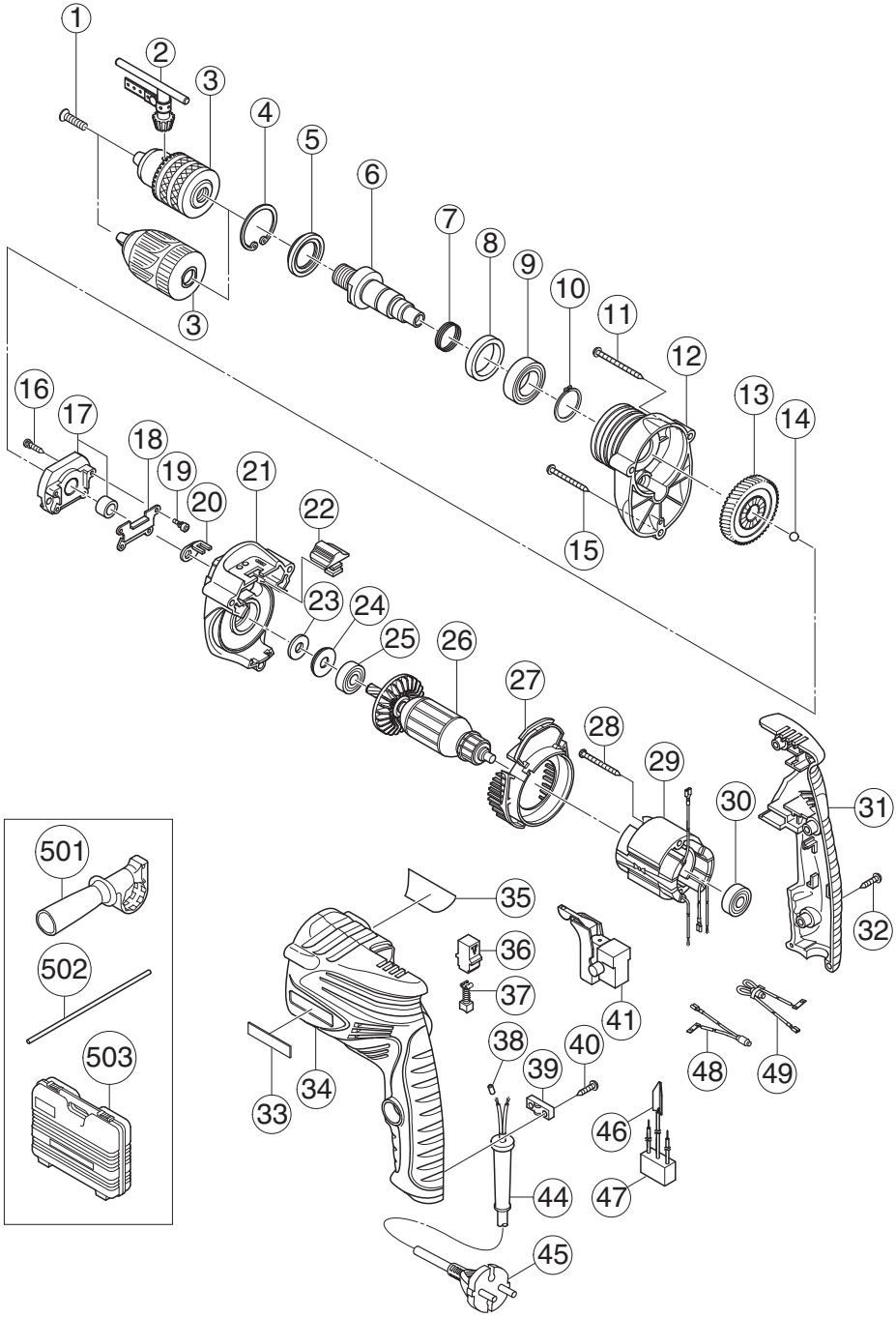
1
2
3
4
5
6
7
8
9
10
11
12
13
14
15
16
17
18
19
20
21
22
23
24
25
26
27
28
29
30
31
32
33
34
35
36
37
38
39
40
41
44
45
46
47
48
49
501
502
503

Item No.	Code No.	No. Used	Remarks
1	995-344	1	M6×25
2	987-576	1	
3-1	———	1	13VLRC-D
3-2	322-625	1	13VLRJ-N
4	948-001	1	
5	971-654	1	
6	331-522	1	
7	322-514	1	
8	330-682	1	
9	600-2VV	1	6002VVCMPS2L
10	939-544	1	
11	322-657	2	D4×60
12	330-726	1	
13	330-683	1	
14	959-150	1	D6.35
15	301-815	1	D4×45
16	330-680	2	D4×20
17	330-677	1	
18	330-678	1	
19	330-679	4	M3
20	330-676	1	
21	330-675	1	
22	322-510	1	
23	323-096	1	
24	330-674	1	
25	608-DDM	1	608DD
26	360-863E	1	220V
27	330-673	1	
28	950-515	2	D4×50
29	340-742F	1	220V
30	608-VVM	1	608VVC2PS2L
31	330-715	1	
32	301-653	3	D4×20
33	330-719	1	
34	330-714	1	
35	———	1	
36	955-203	2	
37	999-041	2	
38	981-373	2	
39	937-631	1	

Item No.	Code No.	No. Used	Remarks
40	984-750	2	D4×16
41	330-716	1	
44	938-051	1	D10.1
45	500-468Z	1	
46	992-635	1	
47	994-273	1	
48	330-686	1	
49	330-685	1	
501	303-659	1	
502	303-709	1	
503	321-635	1	

服务中心
工机商业(上海)有限公司
上海市闵行区浦江工业园区三鲁路3585号7幢3楼

制造商
福建高壹工机有限公司
福建省福州市福兴投资区湖塘路

Koki Holdings Co., Ltd.

810
编号：C99174427 F
发行日期：2018年10月
中国印刷